Dist	COUNTY	ROUTE	POST MILES TOTAL PROJECT	SHEET No.	TOTAL SHEETS
10	SJ	99/120	4.64/5.72 6.44/T6.76	321	349

REGISTERED CIVIL ENGINEER DATE

PLANS APPROVAL DATE

REGISTERED PROFESSIONAL ENGINEER TRUONG VIET PHAM No. 81809 Exp. 3/31/22 CIVIL STATE OF CALIFORNIA

THE STATE OF CALIFORNIA OR ITS OFFICERS OR AGENTS SHALL NOT BE RESPONSIBLE FOR THE ACCURACY OR COMPLETENESS OF SCANNED COPIES OF THIS PLAN SHEET.

SJCOG
555 E. WEBER AVE
STOCKTON, CA 95202

MARK THOMAS
701 UNIVERSITY AVENUE, SUITE 200
SACRAMENTO, CA 95825

PROFILE GRADE
NO SCALE

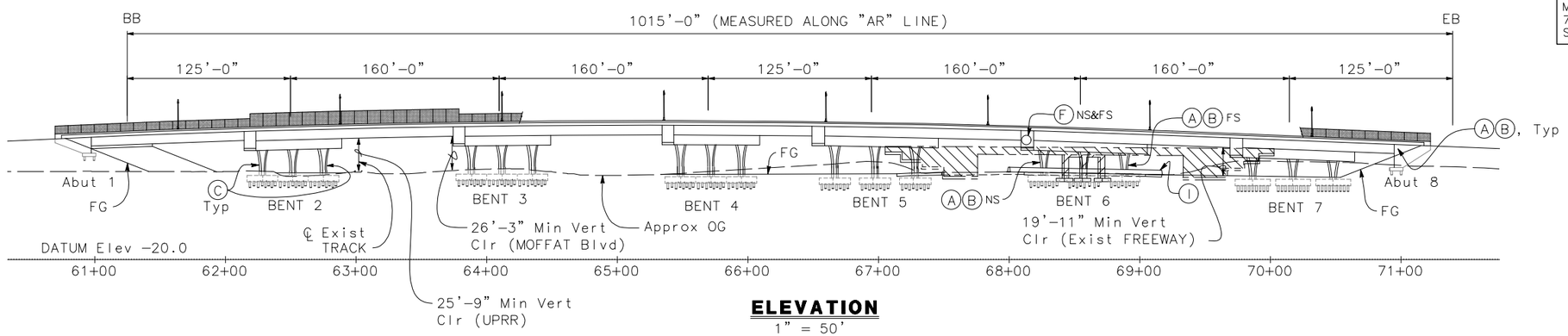

ELEVATION
1" = 50'

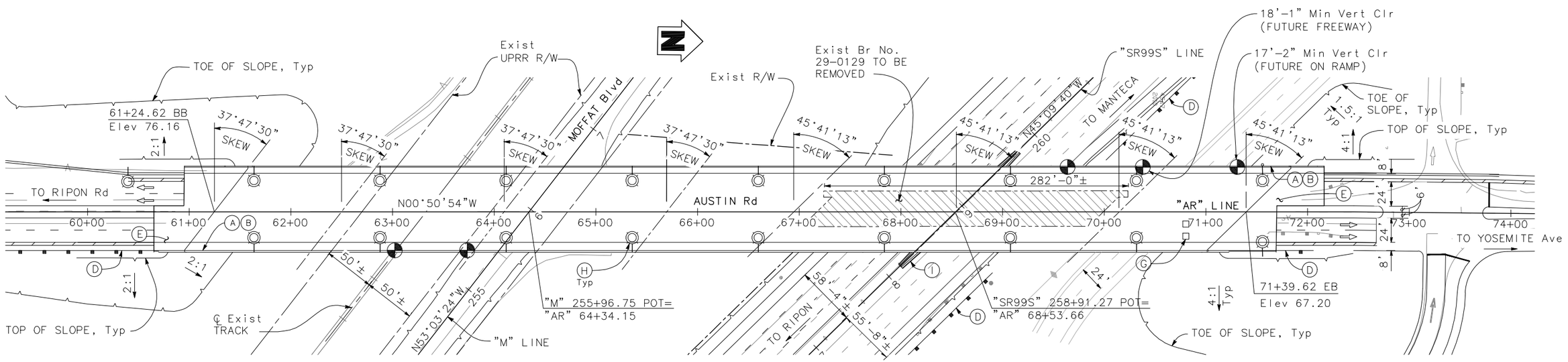

PLAN
1" = 50'

NOTES:

- (A) Paint "AUSTIN ROAD OH"
- (B) Paint "BR. No. 29-0351" and "Year Constructed"
- (C) Paint "BENT No."
- (D) MGS, see "ROAD PLANS"
- (E) Structure Approach Type N(30)
- (F) City of Manteca Logo
- (G) Preformed Loop Detector
- (H) Street Lighting
- (I) Concrete Barrier (Type 60MGF), see "ROAD PLANS"

LEGEND:

- Indicates Street Light
- Indicates Point of Minimum Vertical Clearance
- Indicates Existing Structure
- Indicates Existing Bridge Removal

NOTE:
THE CONTRACTOR SHALL VERIFY ALL CONTROLLING DIMENSIONS BEFORE ORDERING OR FABRICATING ANY MATERIAL.

REZA ERFANIAN DESIGN OVERSIGHT	DESIGN	BY T. PHAM	CHECKED Y. REN	LOAD & RESISTANCE FACTOR DESIGN	LIVE LOADING HL93 AND PERMIT DESIGN VEHICLE
	DETAILS	BY J. DOTY	CHECKED T. PHAM	LAYOUT BY R. YANG	CHECKED G. HORTON
SIGN OFF DATE	QUANTITIES	BY C. GUARDADO	CHECKED A. CLUBB/N. FELDE	SPECIFICATIONS BY E. FEDRICKSON	PLANS AND SPECS COMPARED

PREPARED FOR THE STATE OF CALIFORNIA DEPARTMENT OF TRANSPORTATION

ERIC FREDRICKSON
PROJECT ENGINEER

BRIDGE No. 29-0351
POST MILE 4.89

AUSTIN ROAD OH (REPLACE)
GENERAL PLAN No. 1

DESIGN GENERAL PLAN SHEET (ENGLISH) (REVISION 4/19/2018)

DATE PLOTTED => 01/27/20
FILE => 01_02_Austin GP.dwg
TIME PLOTTED => 4:43 PM
USERNAME => tpham
ORIGINAL SCALE IN INCHES FOR REDUCED PLANS 0 1 2 3

UNIT:
PROJECT NUMBER & PHASE: 101600 0038
CONTRACT No.: 10-1E7401

DISREGARD PRINTS BEARING EARLIER REVISION DATES

REVISION DATES 1/24/20 12/25/20 07/08/21

SHEET 1 OF 29

Dist	COUNTY	ROUTE	POST MILES TOTAL PROJECT	SHEET No.	TOTAL SHEETS
10	SJ	99/120	4.64/5.72 6.44/T6.76	322	349

REGISTERED CIVIL ENGINEER DATE

PLANS APPROVAL DATE

REGISTERED PROFESSIONAL ENGINEER TRUONG VIET PHAM No. 81809 Exp. 3/31/22 CIVIL STATE OF CALIFORNIA

THE STATE OF CALIFORNIA OR ITS OFFICERS OR AGENTS SHALL NOT BE RESPONSIBLE FOR THE ACCURACY OR COMPLETENESS OF SCANNED COPIES OF THIS PLAN SHEET.

SJCOG
555 E. WEBER AVE
STOCKTON, CA 95202

MARK THOMAS
701 UNIVERSITY AVENUE, SUITE 200
SACRAMENTO, CA 95825

QUANTITIES

BRIDGE REMOVAL	1 LS
STRUCTURE EXCAVATION (BRIDGE)	4,319 CY
STRUCTURE BACKFILL (BRIDGE)	2,524 CY
FURNISH PILING (CLASS 200) (ALTERNATIVE W)	16,119 LF
DRIVE PILE (CLASS 200) (ALTERNATIVE W)	375 EA
FURNISH PILING (CLASS 200) (ALTERNATIVE W MODIFIED)	3,569 LF
DRIVE PILE (CLASS 200) (ALTERNATIVE W MODIFIED)	62 EA
STRUCTURAL CONCRETE, BRIDGE FOOTING	1,227 CY
STRUCTURAL CONCRETE, BRIDGE	2,571 CY
STRUCTURAL CONCRETE, BRIDGE (POLYMER FIBER)	3,582 CY
STRUCTURAL CONCRETE APPROACH SLAB (TYPE N)	380 CY
FURNISH PRECAST PRESTRESSED CONCRETE WIDE-FLANGE GIRDER (110-120)	3 EA
FURNISH PRECAST PRESTRESSED CONCRETE WIDE-FLANGE GIRDER (120-130)	22 EA
FURNISH PRECAST PRESTRESSED CONCRETE WIDE-FLANGE GIRDER (130-140)	2 EA
FURNISH PRECAST PRESTRESSED CONCRETE WIDE-FLANGE GIRDER (150-160)	36 EA
ERECT PRECAST PRESTRESSED CONCRETE WIDE-FLANGE GIRDER	63 EA
JOINT SEAL ASSEMBLY (MR 3 ½")	207 LF
BAR REINFORCING STEEL (BRIDGE)	1,869,795 LB
BAR REINFORCING STEEL (EPOXY COATED)(BRIDGE)	34,844 LB
HEADED BAR REINFORCEMENT	1,180 EA
MISCELLANEOUS METAL (BRIDGE)	34,472 LB
ANTI-GRAFFITI COATING	13,928 SQFT
CHAIN LINK RAILING (TYPE 7)	2,174 LF
CONCRETE BARRIER (TYPE 732SW)	1,121 LF
CONCRETE BARRIER (TYPE 836)	1,053 LF

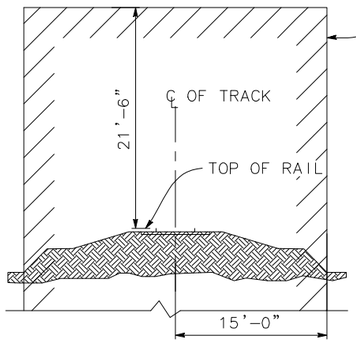

MINIMUM CONSTRUCTION CLEARANCE ENVELOPE

(NORMAL TO RAILROAD)

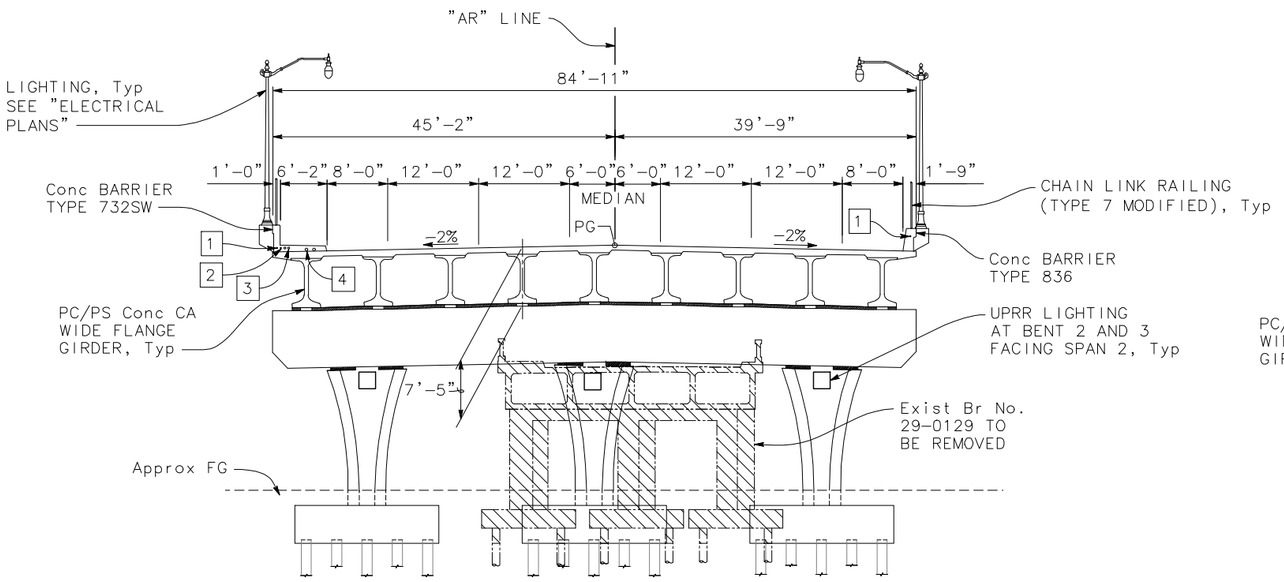

TYPICAL SECTION (SPAN 2 - 6)

1" = 10'

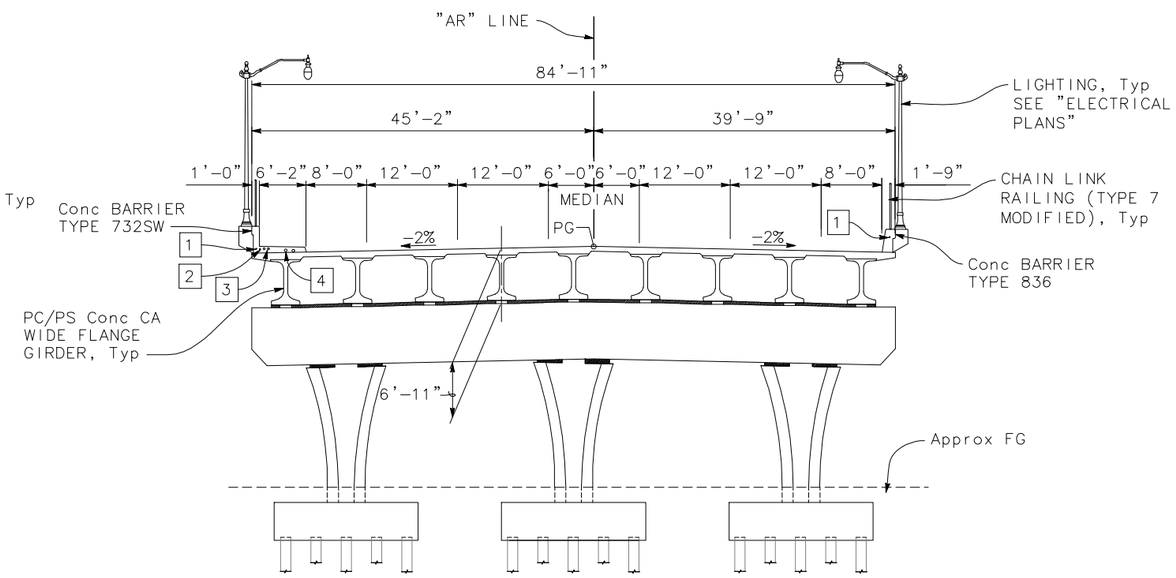

TYPICAL SECTION (SPAN 1 & 7)

1" = 10'

LEGEND:

---- Indicates Existing Structure

Indicates Existing Bridge Removal

UTILITIES:

1 Indicates (1) Conduit (Lighting)

2 Indicates (1) 2"ø Conduit (Signal)

3 Indicates (2) 3"ø Conduit (SIC, Future)

4 Indicates (2) 4"ø Conduit (Future)

NOTE:
THE CONTRACTOR SHALL VERIFY ALL CONTROLLING DIMENSIONS BEFORE ORDERING OR FABRICATING ANY MATERIAL.

REZA ERFANIAN DESIGN OVERSIGHT	DESIGN	BY T. PHAM	CHECKED Y. REN	LOAD & RESISTANCE FACTOR DESIGN	LIVE LOADING HL93 AND PERMIT DESIGN VEHICLE
	DETAILS	BY J. DOTY	CHECKED T. PHAM	LAYOUT BY R. YANG	CHECKED G. HORTON
SIGN OFF DATE	QUANTITIES	BY C. GUARDADO	CHECKED A. CLUBB/N. FELDE	SPECIFICATIONS BY E. FEDRICKSON	PLANS AND SPECS COMPARED

PREPARED FOR THE STATE OF CALIFORNIA DEPARTMENT OF TRANSPORTATION

ERIC FREDRICKSON
PROJECT ENGINEER

BRIDGE No. 29-0351
POST MILE 4.89

AUSTIN ROAD OH (REPLACE)

GENERAL PLAN No. 2

DESIGN GENERAL PLAN SHEET (ENGLISH) (REVISION 4/19/2018)

DATE PLOTTED => 01/27/20 TIME PLOTTED => 9:17 AM
FILE => 01_02_Austin GP.dwg USERNAME => tpham

ORIGINAL SCALE IN INCHES FOR REDUCED PLANS 0 1 2 3

UNIT:
PROJECT NUMBER & PHASE: 101600 0038 CONTRACT No.: 10-1E7401

DISREGARD PRINTS BEARING EARLIER REVISION DATES

REVISION DATES 7/24/20 12/25/20 07/08/21

SHEET 2 OF 29

Dist	COUNTY	ROUTE	POST MILES TOTAL PROJECT	SHEET No.	TOTAL SHEETS
10	SJ	99/120	4.64/5.72 6.44/T6.76	323	349

REGISTERED CIVIL ENGINEER DATE

PLANS APPROVAL DATE

REGISTERED PROFESSIONAL ENGINEER
TRUONG VIET PHAM
No. 81809
Exp. 3/31/22
CIVIL
STATE OF CALIFORNIA

THE STATE OF CALIFORNIA OR ITS OFFICERS OR AGENTS SHALL NOT BE RESPONSIBLE FOR THE ACCURACY OR COMPLETENESS OF SCANNED COPIES OF THIS PLAN SHEET.

SJCOG
555 E. WEBER AVE
STOCKTON, CA 95202

MARK THOMAS
701 UNIVERSITY AVENUE, SUITE 200
SACRAMENTO, CA 95825

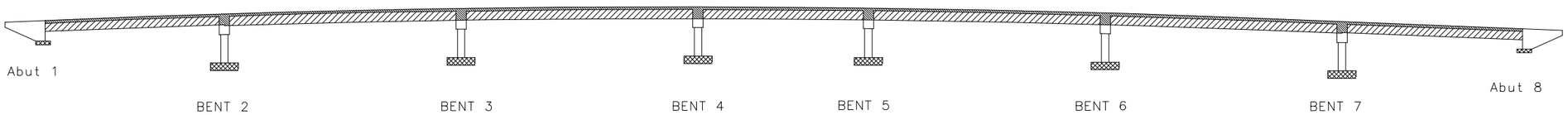

Structural Concrete, Bridge

PC P/S Concrete CA Wide Flange Girder, See "PRESTRESSING NOTES" GIRDER DETAILS No. 2" sheet.

Structural Concrete, Bridge (Polymer fiber) (f'c = 5.0 ksi @ 28 days)

Structural Concrete, Bridge Footing

CONCRETE STRENGTH AND TYPE LIMITS

NO SCALE

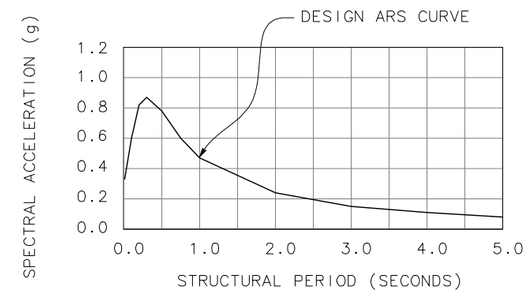

ARS CURVE

(5% DAMPING)

GENERAL NOTES
LOAD AND RESISTANCE FACTOR DESIGN

DESIGN:
AASHTO LRFD Bridge Design Specifications, 8th edition with California Amendments.

SEISMIC DESIGN:
Caltrans Seismic Design Criteria (SDC), Version 2.0 dated April 2019.

DEAD LOAD:
Includes 35 psf for future wearing surface. The deck load between the girders has been increased by a factor of 10% to allow for the use of steel deck forms.

LIVE LOADING:
HL93 and permit design load.

SEISMIC LOADING:
Soil Profile:
Vs30 = 253 m/s (830 ft/s) (liquefaction case)
Vs30 = 275 m/s (902 ft/sec) (non-liquefaction case)
Moment Magnitude: 7.1
Peak Ground Acceleration 0.32g
See ARS Curve

CONCRETE:
fy = 60 ksi
f'c = 3.6 ksi unless otherwise noted
n = 8
See "PRESTRESSING NOTES" on "GIRDER DETAILS No. 2" sheet

PILE:
See "PILE DATA TABLE" on "FOUNDATION PLAN No. 1" sheet.

STANDARD PLANS DATED 2018

A3A–A3C	ABBREVIATIONS
A10A–A10E	LINES AND SYMBOLS
A10F–A10G	LEGEND – SOIL
A62C	LIMITS OF PAYMENT FOR EXCAVATION AND BACKFILL – BRIDGE
A78F1	DOUBLE THRIE BEAM BARRIER – CONNECTIONS TO BRIDGE RAILINGS WITHOUT SIDEWALKS
A78F2	SINGLE THRIE BEAM BARRIER – CONNECTIONS TO BRIDGE RAILINGS WITHOUT SIDEWALKS
RSP B0–1	BRIDGE DETAILS
B0–3	BRIDGE DETAILS
B0–5	BRIDGE DETAILS
B0–13	BRIDGE DETAILS
RSP B2–8	PILE DETAILS CLASS 200
B9–1	STRUCTURE APPROACH TYPE N (30)
B9–5	STRUCTURE APPROACH SLAB DETAILS
B9–6	STRUCTURE APPROACH DRAINAGE DETAILS
RSP B11–52	CHAIN LINK RAILING TYPE 7
B11–58	CONCRETE BARRIER TYPE 732SW (SHEET 1 OF 2)
B11–59	CONCRETE BARRIER TYPE 732SW (SHEET 2 OF 2)
RSP B11–79	CONCRETE BARRIER TYPE 836 DETAILS No. 1
RSP B11–80	CONCRETE BARRIER TYPE 836 DETAILS No. 2
ES–9B	ELECTRICAL SYSTEM (CONDUIT RISER AND EXPANSION FITTING, STRUCTURE INSTALLATIONS

Standard Plan Sheet No.

Detail No.

INDEX TO PLANS

SHEET NO.	TITLE
1	GENERAL PLAN No. 1
2	GENERAL PLAN No. 2
3	INDEX TO PLAN
4	EXISTING BRIDGE REMOVAL
5	DECK CONTOURS
6	FOUNDATION PLAN No. 1
7	FOUNDATION PLAN No. 2
8	ABUTMENT 1 LAYOUT
9	ABUTMENT 8 LAYOUT
10	ABUTMENT DETAILS
11	BENT LAYOUT No. 1
12	BENT LAYOUT No. 2
13	BENT LAYOUT No. 3
14	BENT DETAILS No. 1
15	BENT DETAILS No. 2
16	BENT DETAILS No. 3
17	TYPICAL SECTION
18	GIRDER LAYOUT
19	GIRDER DETAILS No. 1
20	GIRDER DETAILS No. 2
21	GIRDER DETAILS No. 3
22	GIRDER DETAILS No. 4
23	GIRDER DETAILS No. 5
24	STRIP JOINT SEAL ASSEMBLY (MAX MR=4")
25	JOINT ARMOR FOR PEDESTRIAN WALKWAYS
26	LOG OF TEST BORINGS (1 OF 4)
27	LOG OF TEST BORINGS (2 OF 4)
28	LOG OF TEST BORINGS (3 OF 4)
29	LOG OF TEST BORINGS (4 OF 4)

NOTE:
THE CONTRACTOR SHALL VERIFY ALL CONTROLLING DIMENSIONS BEFORE ORDERING OR FABRICATING ANY MATERIAL.

REZA ERFANIAN
DESIGN OVERSIGHT

SIGN OFF DATE

	BY	CHECKED
DESIGN	T. PHAM	Y. REN
DETAILS	J. DOTY	T. PHAM
QUANTITIES	C. GUARDADO	A. CLUBB/N. FELDE

PREPARED FOR THE STATE OF CALIFORNIA DEPARTMENT OF TRANSPORTATION

ERIC FREDRICKSON
PROJECT ENGINEER

BRIDGE No. 29-0351
POST MILE 4.89

AUSTIN ROAD OH (REPLACE)
INDEX TO PLAN

DESIGN DETAIL SHEET (ENGLISH) (REVISION 4/19/2018)

DATE PLOTTED => 1/27/20
FILE => 03_Austin ITP.dwg
TIME PLOTTED => 5:30 PM
USERNAME => astamaria
ORIGINAL SCALE IN INCHES FOR REDUCED PLANS 0 1 2 3

UNIT:
PROJECT NUMBER & PHASE: 101600 0038
CONTRACT No.: 10-1E7401

DISREGARD PRINTS BEARING EARLIER REVISION DATES
REVISION DATES 7/24/20 12/25/20 07/12/21

SHEET 3 OF 29

Dist	COUNTY	ROUTE	POST MILES TOTAL PROJECT	SHEET No.	TOTAL SHEETS
10	SJ	99/120	4.64/5.72 6.44/T6.76	324	349

REGISTERED CIVIL ENGINEER DATE

PLANS APPROVAL DATE

REGISTERED PROFESSIONAL ENGINEER
TRUONG VIET PHAM
No. 81809
Exp. 3/31/22
CIVIL
STATE OF CALIFORNIA

THE STATE OF CALIFORNIA OR ITS OFFICERS OR AGENTS SHALL NOT BE RESPONSIBLE FOR THE ACCURACY OR COMPLETENESS OF SCANNED COPIES OF THIS PLAN SHEET.

SJCOG
555 E. WEBER AVE
STOCKTON, CA 95202

MARK THOMAS
701 UNIVERSITY AVENUE, SUITE 200
SACRAMENTO, CA 95825

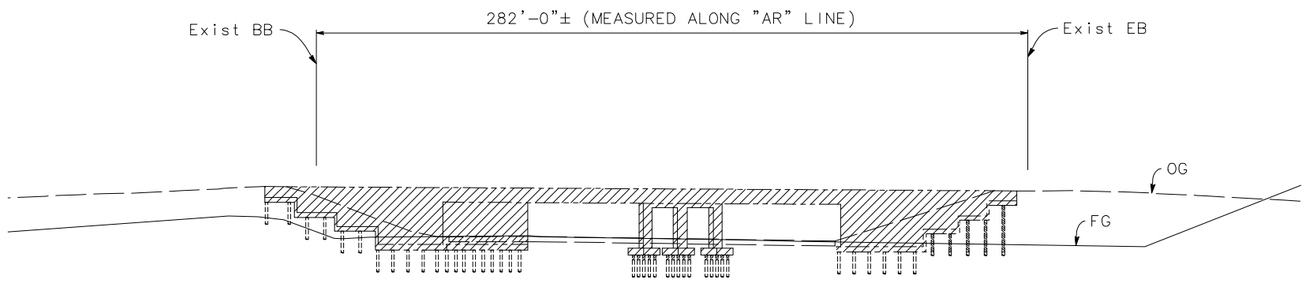

ELEVATION
1" = 30'

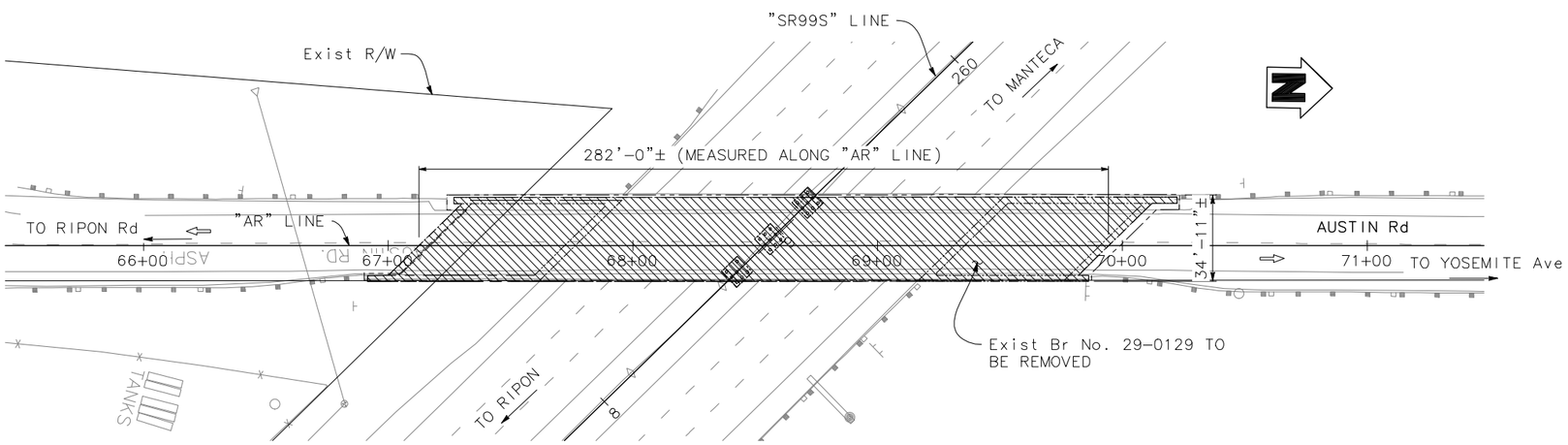

PLAN
1" = 30'

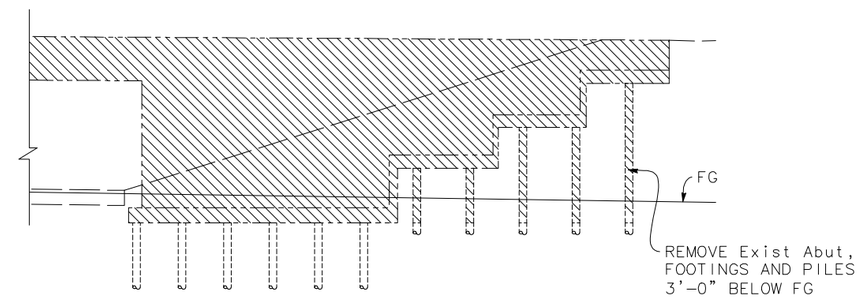

ABUTMENT REMOVAL LIMITS
1" = 10'

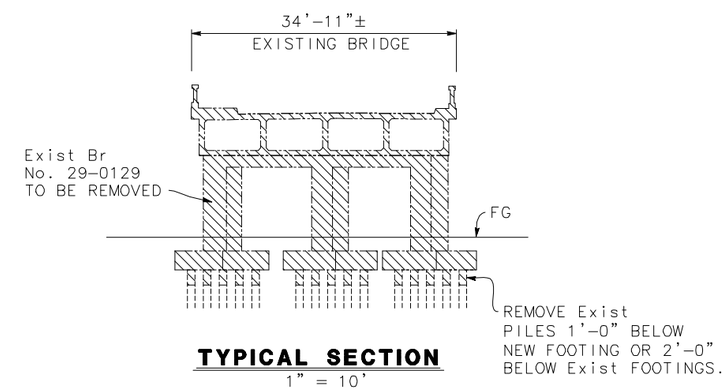

TYPICAL SECTION
1" = 10'

LEGEND:

---- Indicates Existing Structure

Indicates Existing Bridge Removal

NOTE:
THE CONTRACTOR SHALL VERIFY ALL CONTROLLING DIMENSIONS BEFORE ORDERING OR FABRICATING ANY MATERIAL.

REZA ERFANIAN
DESIGN OVERSIGHT

SIGN OFF DATE

DESIGN DETAIL SHEET (ENGLISH) (REVISION 4/19/2018)

	BY	CHECKED
DESIGN	T. PHAM	Y. REN
DETAILS	J. DOTY	T. PHAM
QUANTITIES	C. GUARDADO	A. CLUBB/N. FELDE

DATE PLOTTED => 1/27/20
FILE => 04_Austin BR.dwg
TIME PLOTTED => 5:53 PM
USERNAME => tpham
ORIGINAL SCALE IN INCHES FOR REDUCED PLANS 0 1 2 3

PREPARED FOR THE STATE OF CALIFORNIA DEPARTMENT OF TRANSPORTATION

ERIC FREDRICKSON
PROJECT ENGINEER

BRIDGE No. 29-0351
POST MILE 4.89

AUSTIN ROAD OH (REPLACE)
EXISTING BRIDGE REMOVAL

UNIT:
PROJECT NUMBER & PHASE: 101600 0038
CONTRACT No.: 10-1E7401

DISREGARD PRINTS BEARING EARLIER REVISION DATES

REVISION DATES 7/24/20 12/25/20 07/12/21

SHEET 4 OF 29

Dist	COUNTY	ROUTE	POST MILES TOTAL PROJECT	SHEET No.	TOTAL SHEETS
10	SJ	99/120	4.64/5.72 6.44/T6.76	325	349

REGISTERED CIVIL ENGINEER DATE

PLANS APPROVAL DATE

REGISTERED PROFESSIONAL ENGINEER
TRUONG VIET PHAM
No. 81809
Exp. 3/31/22
CIVIL
STATE OF CALIFORNIA

THE STATE OF CALIFORNIA OR ITS OFFICERS OR AGENTS SHALL NOT BE RESPONSIBLE FOR THE ACCURACY OR COMPLETENESS OF SCANNED COPIES OF THIS PLAN SHEET.

SJCOG
555 E. WEBER AVE
STOCKTON, CA 95202

MARK THOMAS
701 UNIVERSITY AVENUE, SUITE 200
SACRAMENTO, CA 95825

NOTES:

1. Contour interval is 0.1 Feet.
2. Contours do not include camber settlement.
3. X – Indicates 10 foot intervals (measured along "AR" line).
4. □ – Indicates 1.0 foot contour.

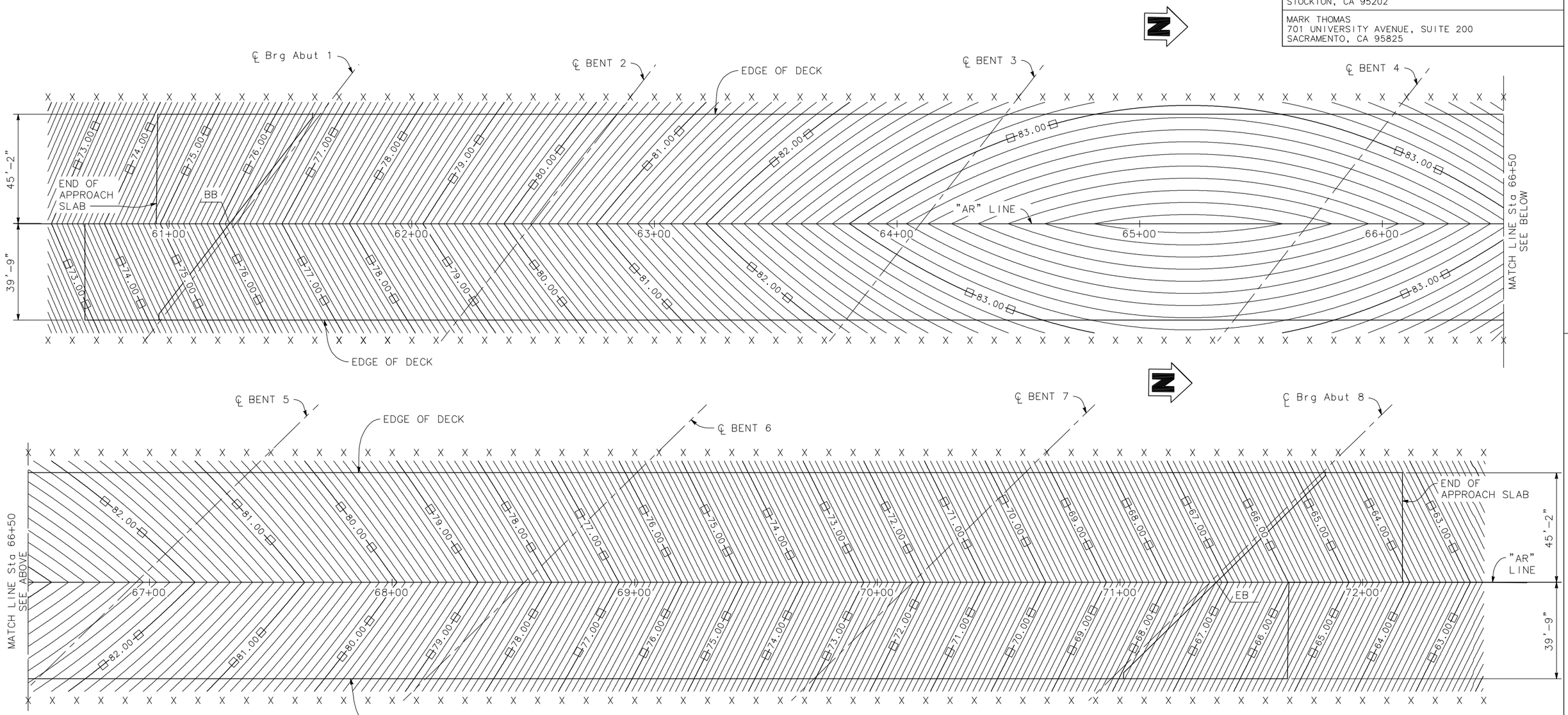

NOTE:
THE CONTRACTOR SHALL VERIFY ALL CONTROLLING DIMENSIONS BEFORE ORDERING OR FABRICATING ANY MATERIAL.

DECK CONTOURS

1" = 20'

REZA ERFANIAN DESIGN OVERSIGHT	DESIGN	BY T. PHAM	CHECKED Y. REN
SIGN OFF DATE	DETAILS	BY J. DOTY	CHECKED T. PHAM
	QUANTITIES	BY C. GUARDADO	CHECKED A. CLUBB/N. FELDE

PREPARED FOR THE STATE OF CALIFORNIA DEPARTMENT OF TRANSPORTATION

ERIC FREDRICKSON
PROJECT ENGINEER

BRIDGE No. 29-0351
POST MILE 4.89

AUSTIN ROAD OH (REPLACE)

DECK CONTOURS

DESIGN DETAIL SHEET (ENGLISH) (REVISION 4/19/2018)

DATE PLOTTED => 1/27/20
FILE => 05_Austin_DC.dwg

TIME PLOTTED => 4:10 PM
USERNAME => gboyko

ORIGINAL SCALE IN INCHES FOR REDUCED PLANS 0 1 2 3

UNIT:
PROJECT NUMBER & PHASE: 101600 0038

CONTRACT No.: 10-1E7401

DISREGARD PRINTS BEARING EARLIER REVISION DATES

REVISION DATES 7/24/20 12/23/20 07/12/21

SHEET 5 OF 29

Dist	COUNTY	ROUTE	POST MILES TOTAL PROJECT	SHEET No.	TOTAL SHEETS
10	SJ	99/120	4.64/5.72 6.44/T6.76	326	349

REGISTERED CIVIL ENGINEER DATE

PLANS APPROVAL DATE

REGISTERED PROFESSIONAL ENGINEER TRUONG VIET PHAM No. 81809 Exp. 3/31/22 CIVIL STATE OF CALIFORNIA

THE STATE OF CALIFORNIA OR ITS OFFICERS OR AGENTS SHALL NOT BE RESPONSIBLE FOR THE ACCURACY OR COMPLETENESS OF SCANNED COPIES OF THIS PLAN SHEET.

SJCOG
555 E. WEBER AVE
STOCKTON, CA 95202

MARK THOMAS
701 UNIVERSITY AVENUE, SUITE 200
SACRAMENTO, CA 95825

PILE DATA TABLE

RSP B2-8

Location	Pile Type	Nominal Resistance (kips)		Design Tip Elevations (ft)	Specified Tip Elevations (ft)	Nominal Driving Resistance (kips)
		Compression	Tension			
Abut 1	CLASS 200 Alt "W"(Mod)	400	n/a	−4.0(a), 29.0(d), 8.0 (e)	−4.0	420
Bent 2	CLASS 200 Alt "W"(Mod)	340	−130	−4.0(a), −4.0(b), −2.0(c), 12.5(d), 10.5(e)	−4.0	340
Bent 3	CLASS 200 Alt "W"(Mod)	340	−120	−4.0(a), −4.0(b), −3.0(c), 13.5(d), 11.5(e)	−4.0	340
Bent 4	CLASS 200 Alt "W"(Mod)	320	−110	−4.0(a), −4.0(b), −4.0(c), 11.5(d), 8.5(e)	−4.0	320
Bent 5	CLASS 200 Alt "W"(Mod)	330	−100	−4.0(a), −4.0(b), −4.0(c), 10.5(d), 7.5(e)	−4.0	330
Bent 6	CLASS 200 Alt "W"(Mod)	350	−110	−4.0(a), −4.0(b), −4.0(c), 12.0(d), 8.0(e)	−4.0	350
Bent 7	CLASS 200 Alt "W"(Mod)	270	−90	−1.0(a), −4.0(b), −3.0(c), 9.5(d), 8.5(e)	−4.0	270
Abut 8	CLASS 200 Alt "W"(Mod)	400	n/a	−4.0(a), 18.0(d), 23.5(e)	−4.0	415

NOTES:

1. Design tip elevations are controlled by: (a)Compression (Strength Limit), (b)Compression (Extreme Limit), (c)Tension (Extreme Limit), (d)Lateral Load, (e)Settlement (Service Limit).
2. The specified tip elevation shall not be raised above the design tip elevations for tension load, lateral load, and tolerable settlement without Blackburn and Mark Thomas review and approval.
3. The required nominal driving resistance is equal to the nominal resistance needed to support the factored load plus driving resistance from the unsuitable soil layers (liquefiable layers), if any, which do not contribute to the design resistance.

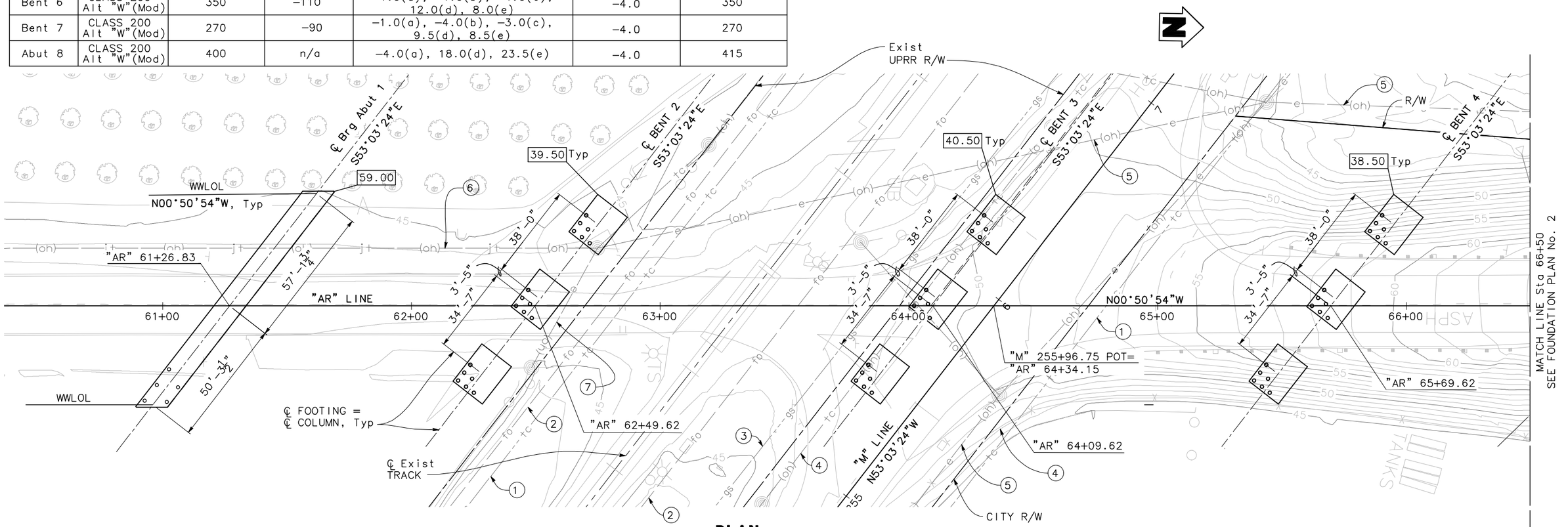

PLAN

1" = 20'

BENCHMARK:

Elevation shown are NGVD 29, based on the State of California Department of Transportation control Data Sheet (U.S. Survey Units). The following points were held for the vertical adjustment.

1. 4855 (SJ-99-M6L-525)
2. 4876 (SJ-99-M6L-549)

NOTES:

1. Indicates Exist Telecom (UG) Line to Remain
2. Indicates Exist Fiber Optic Line to Remain
3. Indicates Exist Natural Gas Line to Remain
4. Indicates Exist Telecom (OH) Line to be Located
5. Indicates Exist Electric (OH) Line to be Located
6. Indicates Exist Electric (OH) and Telecom to be Relocated

LEGEND:

Indicates Bottom of Footing Elevation (feet)

Indicates Pipe Pile (not all piles shown)

NOTE:
THE CONTRACTOR SHALL VERIFY ALL CONTROLLING DIMENSIONS BEFORE ORDERING OR FABRICATING ANY MATERIAL.

REZA ERFANIAN
DESIGN OVERSIGHT

SIGN OFF DATE

FOUNDATION PLAN SHEET (ENGLISH) (REVISION 4/19/2018)

SCALE: 0.99993 | VERT.DATUM NGVD 29 | HORZ.DATUM CCS83(2011), ZONE 3 EPOCH 2010.00

PHOTOGRAMMETRY AS OF: | ALIGNMENT TIES:

SURVEYED BY | DRAFTED BY

FIELD CHECKED BY | CHECKED BY

GEOTECHNICAL PROFESSIONAL APPROVAL DATE

DESIGN BY T. PHAM CHECKED Y. REN

DETAILS BY J. DOTY CHECKED T. PHAM

QUANTITIES BY C. GUARDADO CHECKED A. CLUBB/N. FELDE

DATE PLOTTED => 1/27/20
FILE => 05_Austin_FP.dwg

TIME PLOTTED => 2:44 PM
USERNAME => astamaria

ORIGINAL SCALE IN INCHES FOR REDUCED PLANS 0 1 2 3

PREPARED FOR THE STATE OF CALIFORNIA DEPARTMENT OF TRANSPORTATION

ERIC FREDRICKSON
PROJECT ENGINEER

BRIDGE No. 29-0351
POST MILE 4.89

AUSTIN ROAD OH (REPLACE)
FOUNDATION PLAN No. 1

UNIT:
PROJECT NUMBER & PHASE: 101600 0038
CONTRACT No.: 10-1E7401

DISREGARD PRINTS BEARING EARLIER REVISION DATES

REVISION DATES 1/24/20 12/23/20 07/08/21

SHEET 6 OF 29

Dist	COUNTY	ROUTE	POST MILES TOTAL PROJECT	SHEET No.	TOTAL SHEETS
10	SJ	99/120	4.64/5.72 6.44/T6.76	327	349

REGISTERED CIVIL ENGINEER DATE

PLANS APPROVAL DATE

REGISTERED PROFESSIONAL ENGINEER TRUONG VIET PHAM No. 81809 Exp. 3/31/22 CIVIL STATE OF CALIFORNIA

THE STATE OF CALIFORNIA OR ITS OFFICERS OR AGENTS SHALL NOT BE RESPONSIBLE FOR THE ACCURACY OR COMPLETENESS OF SCANNED COPIES OF THIS PLAN SHEET.

SJCOG
555 E. WEBER AVE
STOCKTON, CA 95202

MARK THOMAS
701 UNIVERSITY AVENUE, SUITE 200
SACRAMENTO, CA 95825

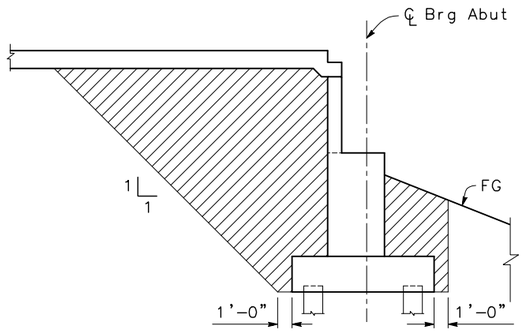

EXCAVATION

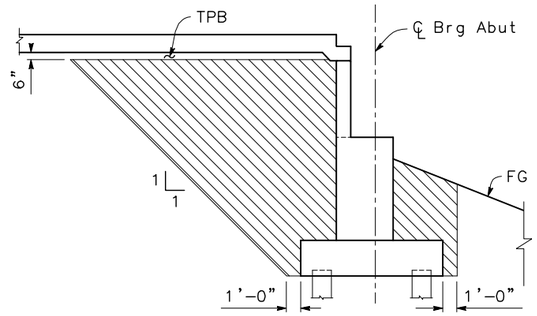

BACKFILL

LEGEND:

STRUCTURE EXCAVATION

STRUCTURE BACKFILL

EXCAVATION AND BACKFILL LIMITS

NO SCALE

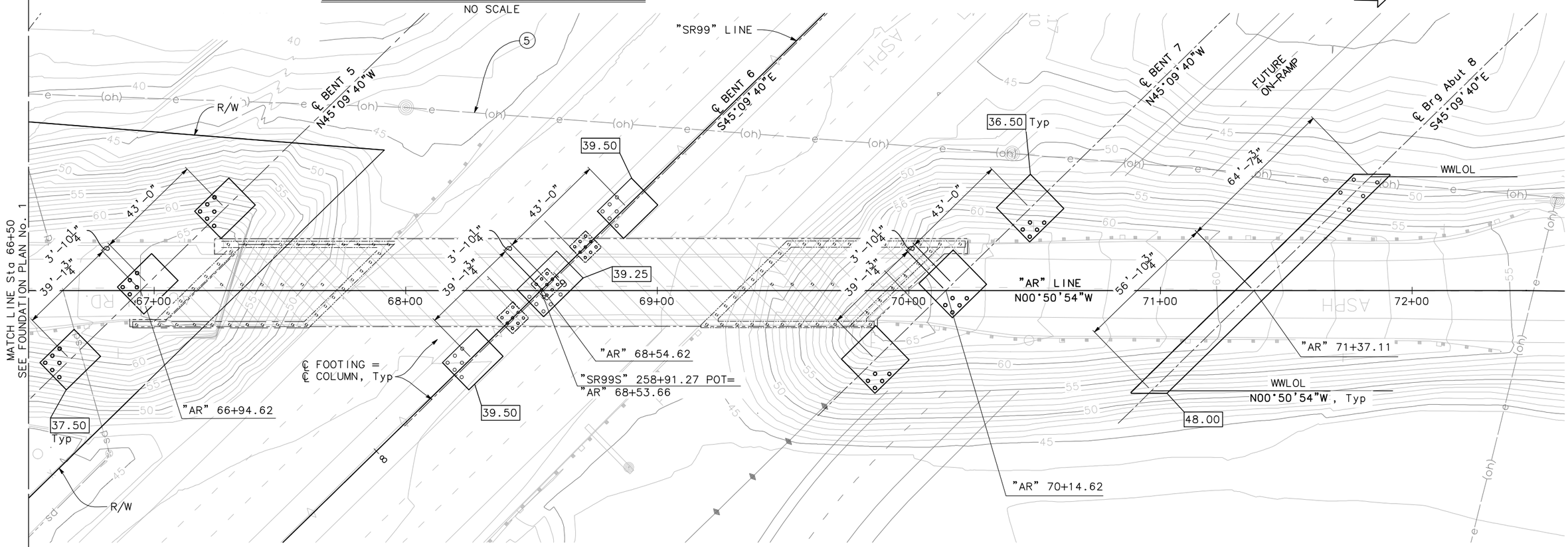

PLAN

1" = 20'

NOTES:

(5) Indicates Exist Electric (OH) Line to be relocated

LEGEND:

Indicates Bottom of Footing Elevation (feet)

Indicates Pipe Pile (not all piles shown)

Indicates Bridge Removal

Indicates Existing Bridge

NOTE:
THE CONTRACTOR SHALL VERIFY ALL CONTROLLING DIMENSIONS BEFORE ORDERING OR FABRICATING ANY MATERIAL.

REZA ERFANIAN
DESIGN OVERSIGHT

SIGN OFF DATE

FOUNDATION PLAN SHEET (ENGLISH) (REVISION 4/19/2018)

SCALE: 0.99993 | VERT.DATUM NGVD 29 | HORZ.DATUM CCS83(2011), ZONE 3 EPOCH 2010.00

PHOTOGRAMMETRY AS OF: | ALIGNMENT TIES:

SURVEYED BY | DRAFTED BY

FIELD CHECKED BY | CHECKED BY

GEOTECHNICAL PROFESSIONAL APPROVAL DATE

DATE PLOTTED => 1/27/20
FILE => 05_Austin_FP.dwg
TIME PLOTTED => 4:48 PM
USERNAME => astamaria

	BY	CHECKED BY
DESIGN	T. PHAM	Y. REN
DETAILS	J. DOTY	T. PHAM
QUANTITIES	C. GUARDADO	A. CLUBB/N. FELDE

ORIGINAL SCALE IN INCHES FOR REDUCED PLANS 0 1 2 3

PREPARED FOR THE STATE OF CALIFORNIA DEPARTMENT OF TRANSPORTATION

ERIC FREDRICKSON
PROJECT ENGINEER

BRIDGE No. 29-0351
POST MILE 4.89

AUSTIN ROAD OH (REPLACE)

FOUNDATION PLAN No. 2

UNIT:
PROJECT NUMBER & PHASE: 101600 0038 CONTRACT No.: 10-1E7401

DISREGARD PRINTS BEARING EARLIER REVISION DATES

REVISION DATES 7/24/20 12/25/20 07/08/21

SHEET 7 OF 29

Dist	COUNTY	ROUTE	POST MILES TOTAL PROJECT	SHEET No.	TOTAL SHEETS
10	SJ	99/120	4.64/5.72 6.44/T6.76	328	349

REGISTERED CIVIL ENGINEER DATE

PLANS APPROVAL DATE

REGISTERED PROFESSIONAL ENGINEER TRUONG VIET PHAM No. 81809 Exp. 3/31/22 CIVIL STATE OF CALIFORNIA

THE STATE OF CALIFORNIA OR ITS OFFICERS OR AGENTS SHALL NOT BE RESPONSIBLE FOR THE ACCURACY OR COMPLETENESS OF SCANNED COPIES OF THIS PLAN SHEET.

SJCOG
555 E. WEBER AVE
STOCKTON, CA 95202

MARK THOMAS
701 UNIVERSITY AVENUE, SUITE 200
SACRAMENTO, CA 95825

LEGEND:

◯ Indicates Vertical Piles, Tot 29

NOTE:
For "DETAIL Y", see "ABUTMENT DETAILS" sheet.

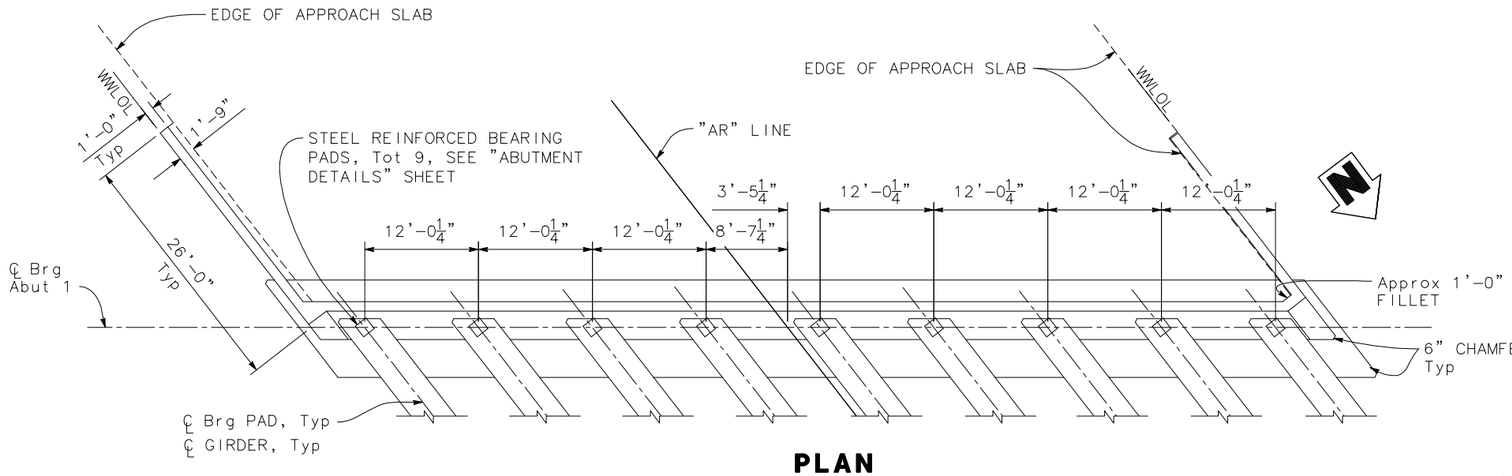

PLAN
1/8" = 1'-0"

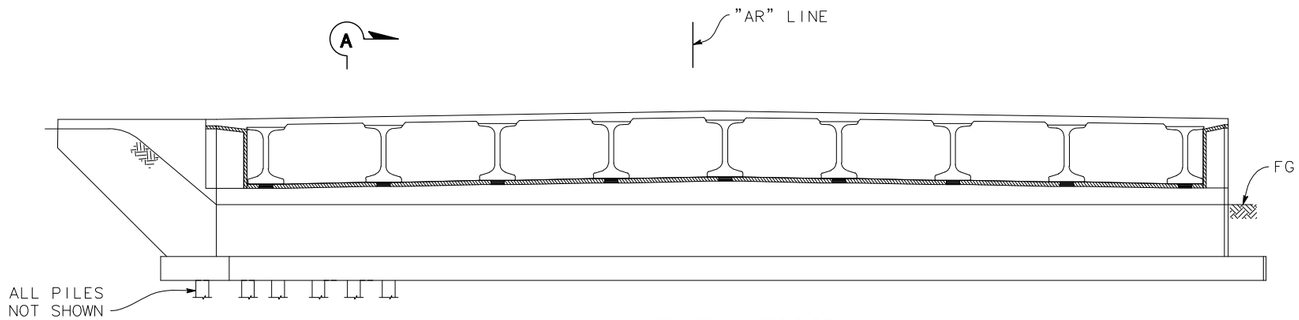

ELEVATION
1/8" = 1'-0"

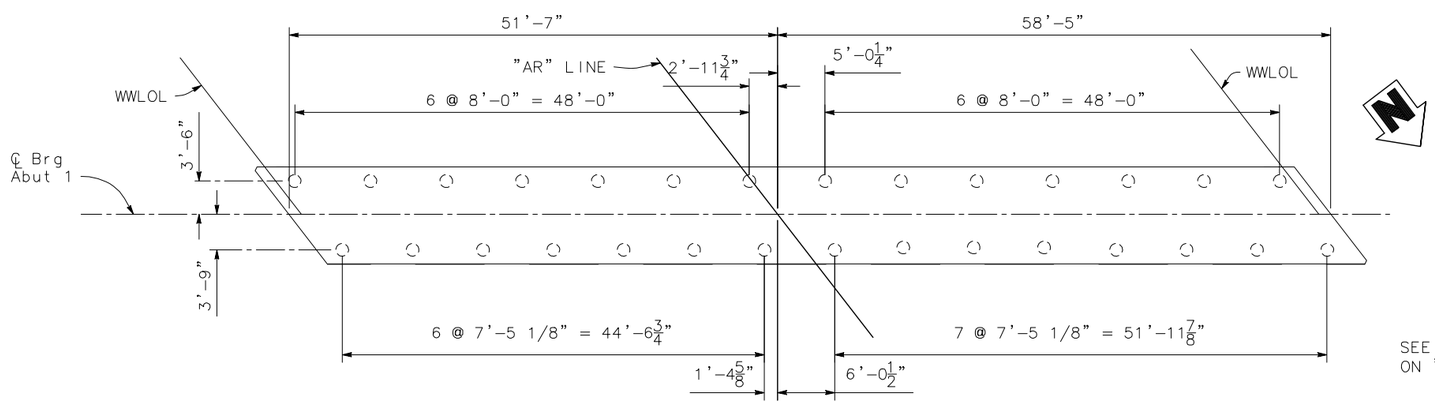

FOOTING PLAN
1/8" = 1'-0"

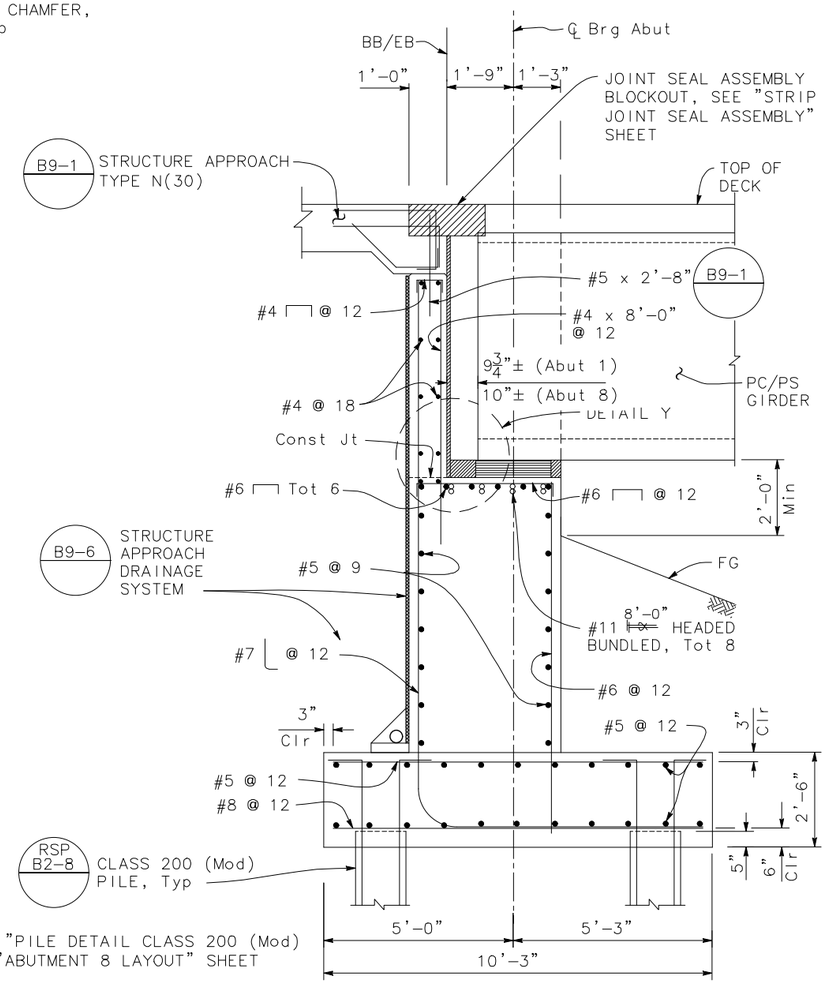

SEE "PILE DETAIL CLASS 200 (Mod) ON "ABUTMENT 8 LAYOUT" SHEET

SECTION A-A
1/2" = 1'-0"

NOTE:
THE CONTRACTOR SHALL VERIFY ALL CONTROLLING DIMENSIONS BEFORE ORDERING OR FABRICATING ANY MATERIAL.

REZA ERFANIAN
DESIGN OVERSIGHT

SIGN OFF DATE

	BY	CHECKED
DESIGN	T. PHAM	Y. REN
DETAILS	J. DOTY	T. PHAM
QUANTITIES	C. GUARDADO	A. CLUBB/N. FELDE

PREPARED FOR THE STATE OF CALIFORNIA DEPARTMENT OF TRANSPORTATION

ERIC FREDRICKSON
PROJECT ENGINEER

BRIDGE No. 29-0351
POST MILE 4.89

AUSTIN ROAD OH (REPLACE)
ABUTMENT 1 LAYOUT

DESIGN DETAIL SHEET (ENGLISH) (REVISION 4/19/2018)

DATE PLOTTED => 1/27/20
FILE => 06-08_Austin_AL.dwg

TIME PLOTTED => 3:20 PM
USERNAME => tpham

ORIGINAL SCALE IN INCHES FOR REDUCED PLANS 0 1 2 3

UNIT:
PROJECT NUMBER & PHASE: 101600 0038

CONTRACT No.: 10-1E7401

DISREGARD PRINTS BEARING EARLIER REVISION DATES

REVISION DATES 7/24/20 12/23/20 07/12/21

SHEET 8 OF 29

Dist	COUNTY	ROUTE	POST MILES TOTAL PROJECT	SHEET No.	TOTAL SHEETS
10	SJ	99/120	4.64/5.72 6.44/T6.76	329	349

REGISTERED CIVIL ENGINEER DATE

PLANS APPROVAL DATE

REGISTERED PROFESSIONAL ENGINEER TRUONG VIET PHAM No. 81809 Exp. 3/31/22 CIVIL STATE OF CALIFORNIA

THE STATE OF CALIFORNIA OR ITS OFFICERS OR AGENTS SHALL NOT BE RESPONSIBLE FOR THE ACCURACY OR COMPLETENESS OF SCANNED COPIES OF THIS PLAN SHEET.

SJCOG
555 E. WEBER AVE
STOCKTON, CA 95202

MARK THOMAS
701 UNIVERSITY AVENUE, SUITE 200
SACRAMENTO, CA 95825

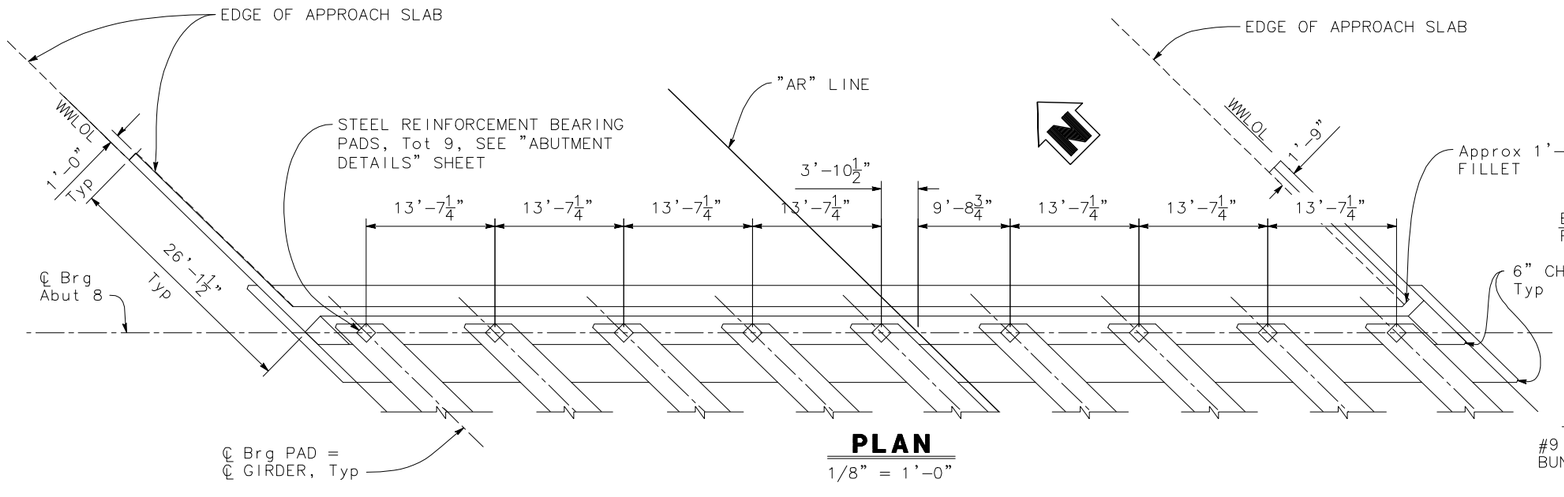

PLAN
1/8" = 1'-0"

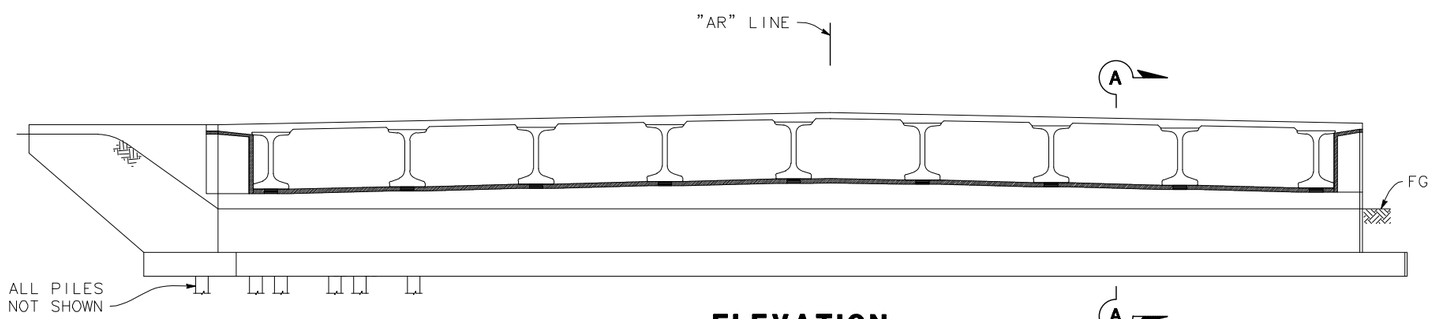

ELEVATION
1/8" = 1'-0"

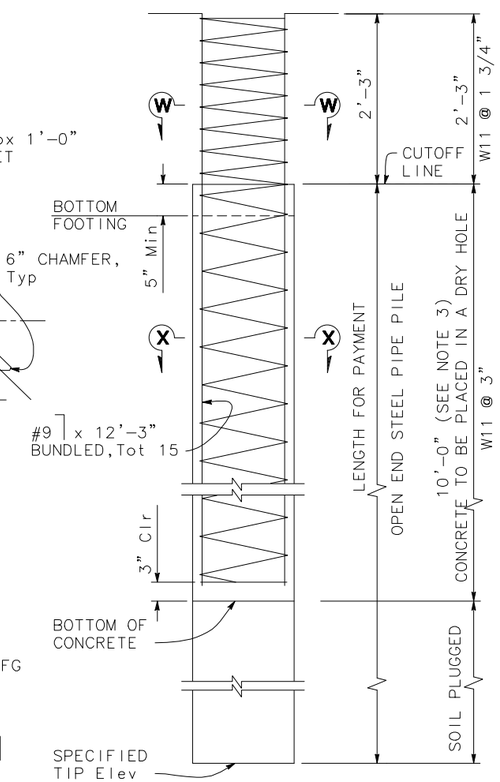

ALT "W" (ABUTMENT PILE)

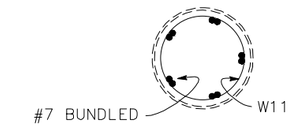

SECTION W-W
1" = 1'-0"

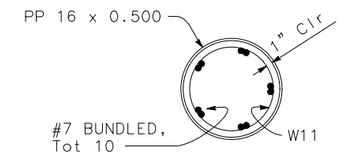

SECTION X-X
1" = 1'-0"

PILE DETAILS CLASS 200 (Mod)
1" = 1'-0"

NOTE: For additional details, see RSP B2-8

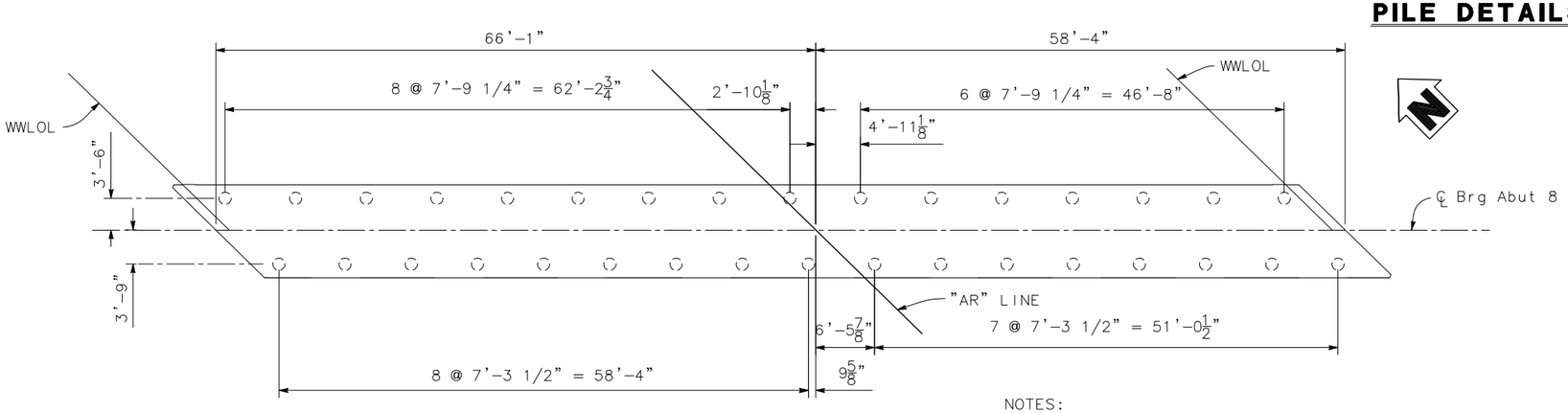

LEGEND:

Indicates Vertical Piles, Tot 33

FOOTING PLAN
1/8" = 1'-0"

NOTES:
1. For "SECTION A-A", see "ABUTMENT 1 LAYOUT" sheet.
2. For "SECTION B-B", see "ABUTMENT DETAILS" sheet.
3. Limit of payment included as Structural Concrete, Bridge Footing

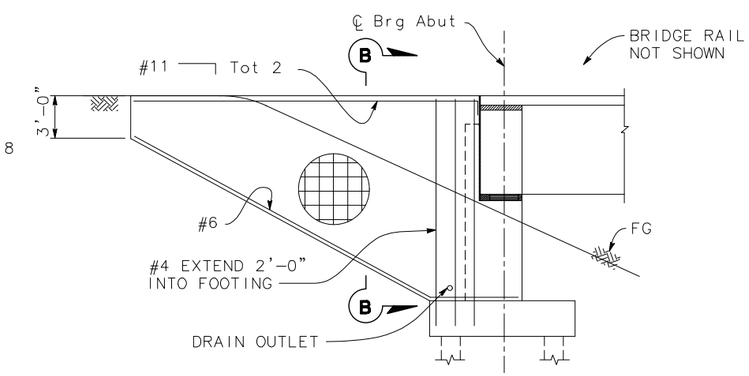

WINGWALL ELEVATION
3/16" = 1'-0"

NOTE:
THE CONTRACTOR SHALL VERIFY ALL CONTROLLING DIMENSIONS BEFORE ORDERING OR FABRICATING ANY MATERIAL.

REZA ERFANIAN DESIGN OVERSIGHT	DESIGN	BY T. PHAM	CHECKED Y. REN
SIGN OFF DATE	DETAILS	BY J. DOTY	CHECKED T. PHAM
	QUANTITIES	BY C. GUARDADO	CHECKED A. CLUBB/N. FELDE

PREPARED FOR THE STATE OF CALIFORNIA DEPARTMENT OF TRANSPORTATION

ERIC FREDRICKSON
PROJECT ENGINEER

BRIDGE No. 29-0351
POST MILE 4.89

AUSTIN ROAD OH (REPLACE)
ABUTMENT 8 LAYOUT

DESIGN DETAIL SHEET (ENGLISH) (REVISION 4/19/2018)

DATE PLOTTED => 1/27/20
FILE => 06-08_Austin_AL.dwg
TIME PLOTTED => 3:20 PM
USERNAME => tpham
ORIGINAL SCALE IN INCHES FOR REDUCED PLANS 0 1 2 3

UNIT:
PROJECT NUMBER & PHASE: 101600 0038
CONTRACT No.: 10-1E7401

DISREGARD PRINTS BEARING EARLIER REVISION DATES 7/24/20 12/23/20 07/12/21

SHEET 9 OF 29

Dist	COUNTY	ROUTE	POST MILES TOTAL PROJECT	SHEET No.	TOTAL SHEETS
10	SJ	99/120	4.64/5.72 6.44/T6.76	330	349

REGISTERED CIVIL ENGINEER DATE

PLANS APPROVAL DATE

REGISTERED PROFESSIONAL ENGINEER TRUONG VIET PHAM No. 81809 Exp. 3/31/22 CIVIL STATE OF CALIFORNIA

THE STATE OF CALIFORNIA OR ITS OFFICERS OR AGENTS SHALL NOT BE RESPONSIBLE FOR THE ACCURACY OR COMPLETENESS OF SCANNED COPIES OF THIS PLAN SHEET.

SJCOG
555 E. WEBER AVE
STOCKTON, CA 95202

MARK THOMAS
701 UNIVERSITY AVENUE, SUITE 200
SACRAMENTO, CA 95825

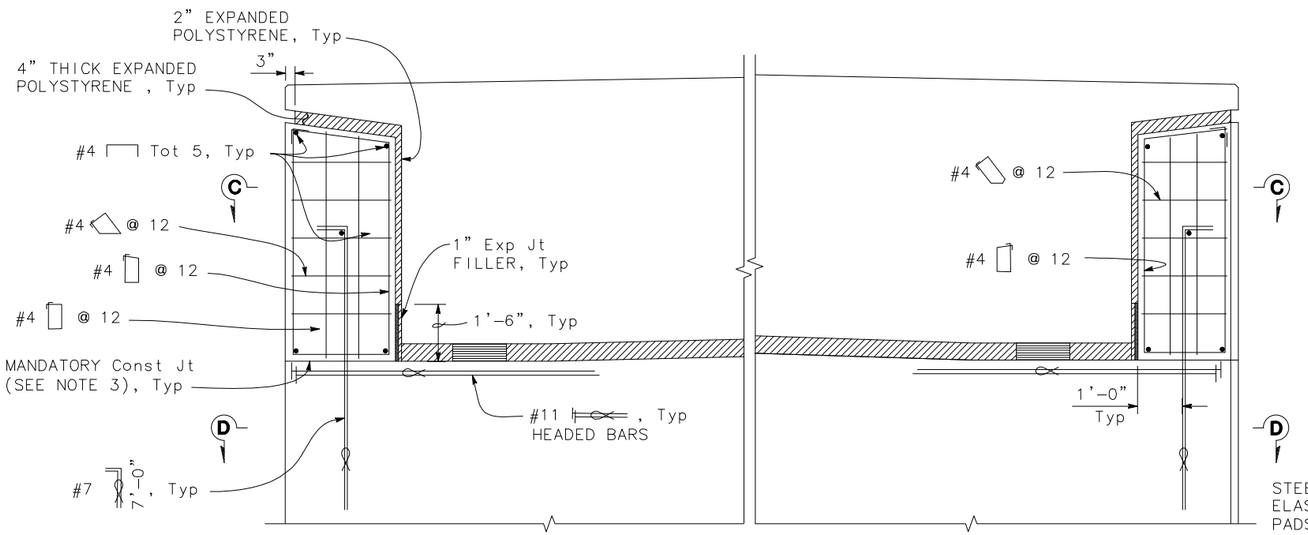

SHEAR KEY ELEVATION

1/2" = 1'-0"

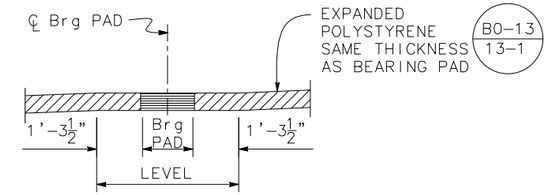

ELEVATION

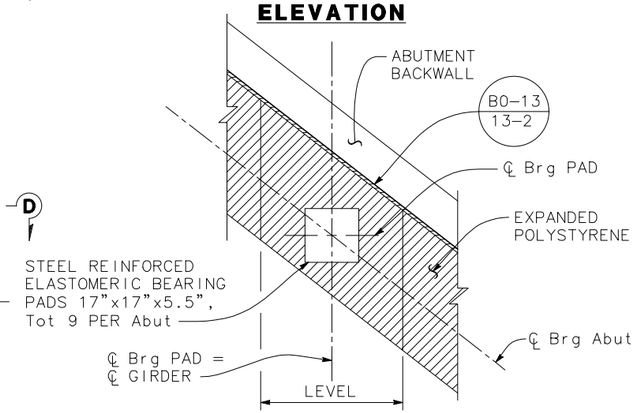

PLAN

ABUTMENT BEARING PAD DETAILS

1/2" = 1'-0"

NOTES:

A. East side wingwalls shown, see Standard Plan B11-59 "SECTION C-C (TYPE E-2)" for west side wingwalls.

B. For section after the west side wingwall, Approach slab must extend to the WWLOL (transversely). See "ABUTMENT LAYOUT" sheets.

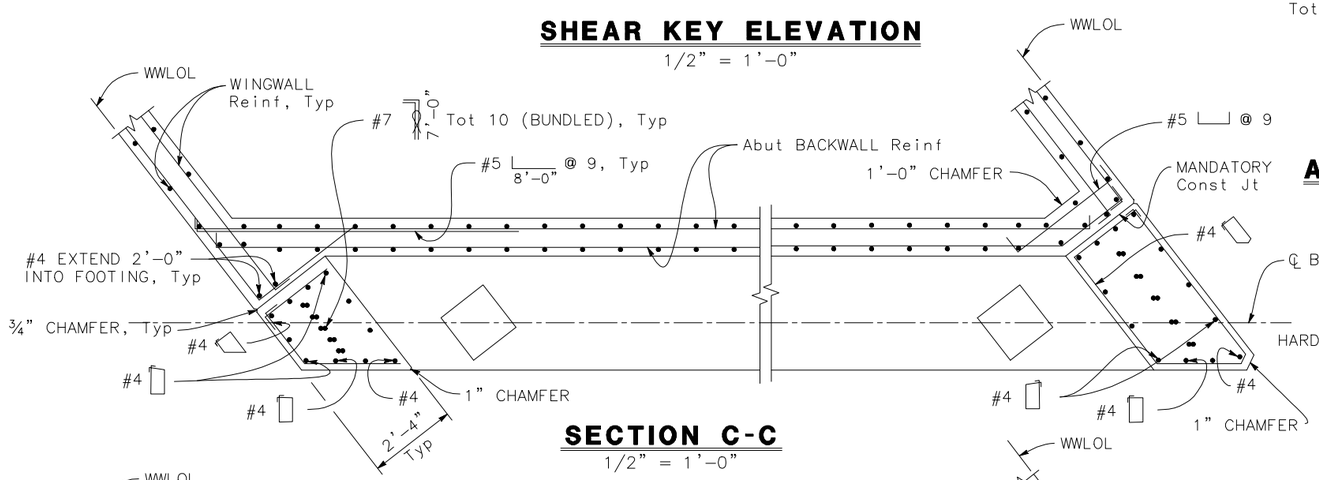

SECTION C-C

1/2" = 1'-0"

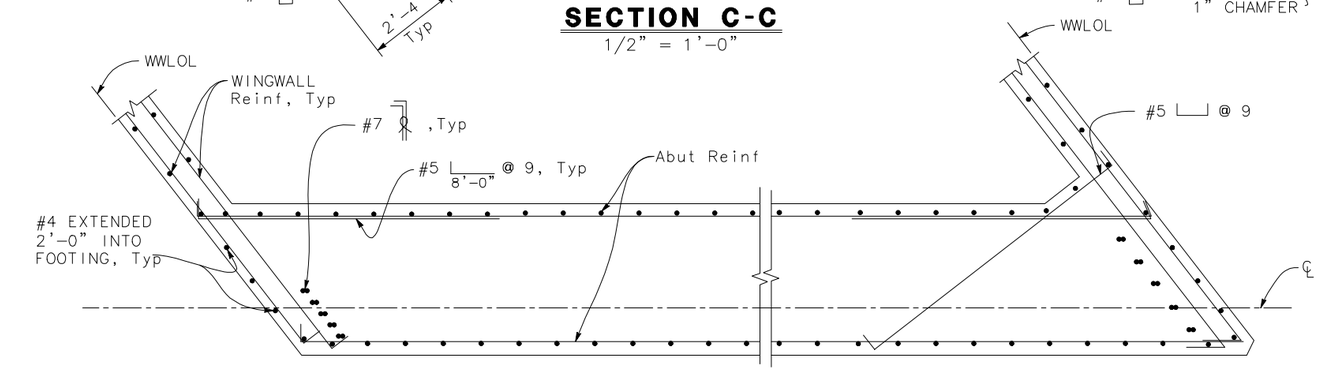

SECTION D-D

1/2" = 1'-0"

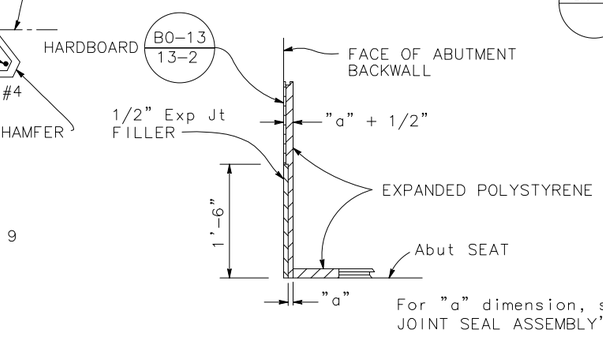

DETAIL Y

1" = 1'-0"

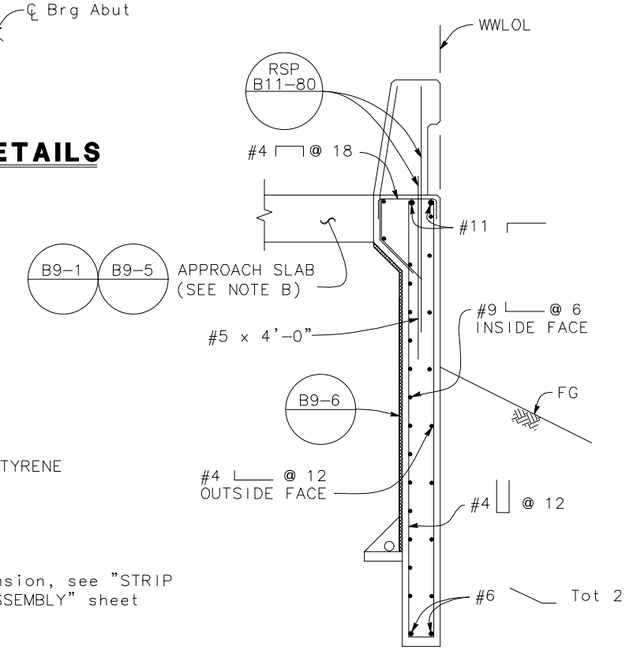

SECTION B-B

1/2" = 1'-0"

RSP B0-1

NOTES:

1. For locations of "DETAIL Y", see "ABUTMENT 1 LAYOUT" sheet.
2. For end diaphragm reinforcement details, see "GIRDER DETAILS No. 3" sheet.
3. Contact surfaces of mandatory construction joint must be leveled, smooth finished and lined with 15 pound building paper.
4. For locations of "SECTION B-B", see "ABUTMENT 8 LAYOUT" sheet.

NOTE:
THE CONTRACTOR SHALL VERIFY ALL CONTROLLING DIMENSIONS BEFORE ORDERING OR FABRICATING ANY MATERIAL.

REZA ERFANIAN
DESIGN OVERSIGHT

SIGN OFF DATE

	BY	CHECKED
DESIGN	T. PHAM	Y. REN
DETAILS	J. DOTY	T. PHAM
QUANTITIES	C. GUARDADO	A. CLUBB/N. FELDE

PREPARED FOR THE STATE OF CALIFORNIA DEPARTMENT OF TRANSPORTATION

ERIC FREDRICKSON
PROJECT ENGINEER

BRIDGE No. 29-0351
POST MILE 4.89

AUSTIN ROAD OH (REPLACE)

ABUTMENT DETAILS

DESIGN DETAIL SHEET (ENGLISH) (REVISION 4/19/2018)

DATE PLOTTED => 1/27/20
FILE => 06-08_Austin_AL.dwg
TIME PLOTTED => 3:20 PM
USERNAME => tpham

ORIGINAL SCALE IN INCHES FOR REDUCED PLANS 0 1 2 3

UNIT:
PROJECT NUMBER & PHASE: 101600 0038

CONTRACT No.: 10-1E7401

DISREGARD PRINTS BEARING EARLIER REVISION DATES

REVISION DATES 7/24/20 12/23/20 07/12/21

SHEET 10 OF 29

Dist	COUNTY	ROUTE	POST MILES TOTAL PROJECT	SHEET No.	TOTAL SHEETS
10	SJ	99/120	4.64/5.72 6.44/T6.76	331	349

REGISTERED CIVIL ENGINEER DATE

PLANS APPROVAL DATE

REGISTERED PROFESSIONAL ENGINEER TRUONG VIET PHAM No. 81809 Exp. 3/31/22 CIVIL STATE OF CALIFORNIA

THE STATE OF CALIFORNIA OR ITS OFFICERS OR AGENTS SHALL NOT BE RESPONSIBLE FOR THE ACCURACY OR COMPLETENESS OF SCANNED COPIES OF THIS PLAN SHEET.

SJCOG
555 E. WEBER AVE
STOCKTON, CA 95202

MARK THOMAS
701 UNIVERSITY AVENUE, SUITE 200
SACRAMENTO, CA 95825

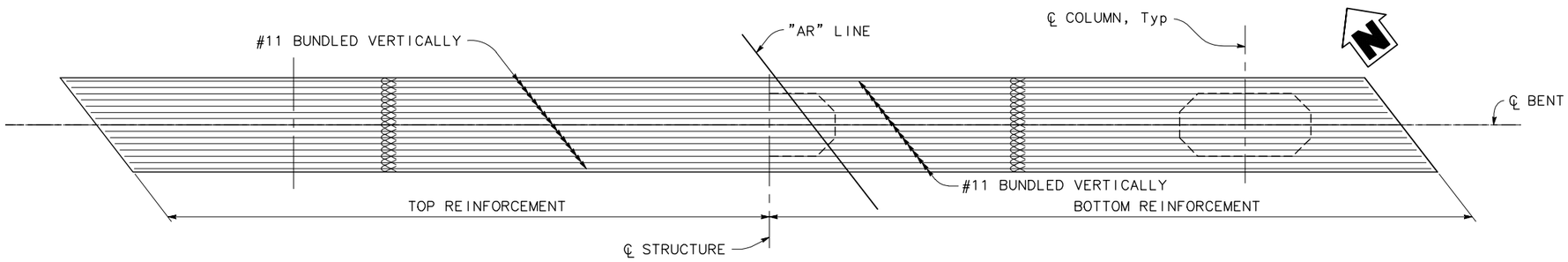

PLAN
3/16" = 1'-0"

LEGEND:
∝ Indicates Bundled bars

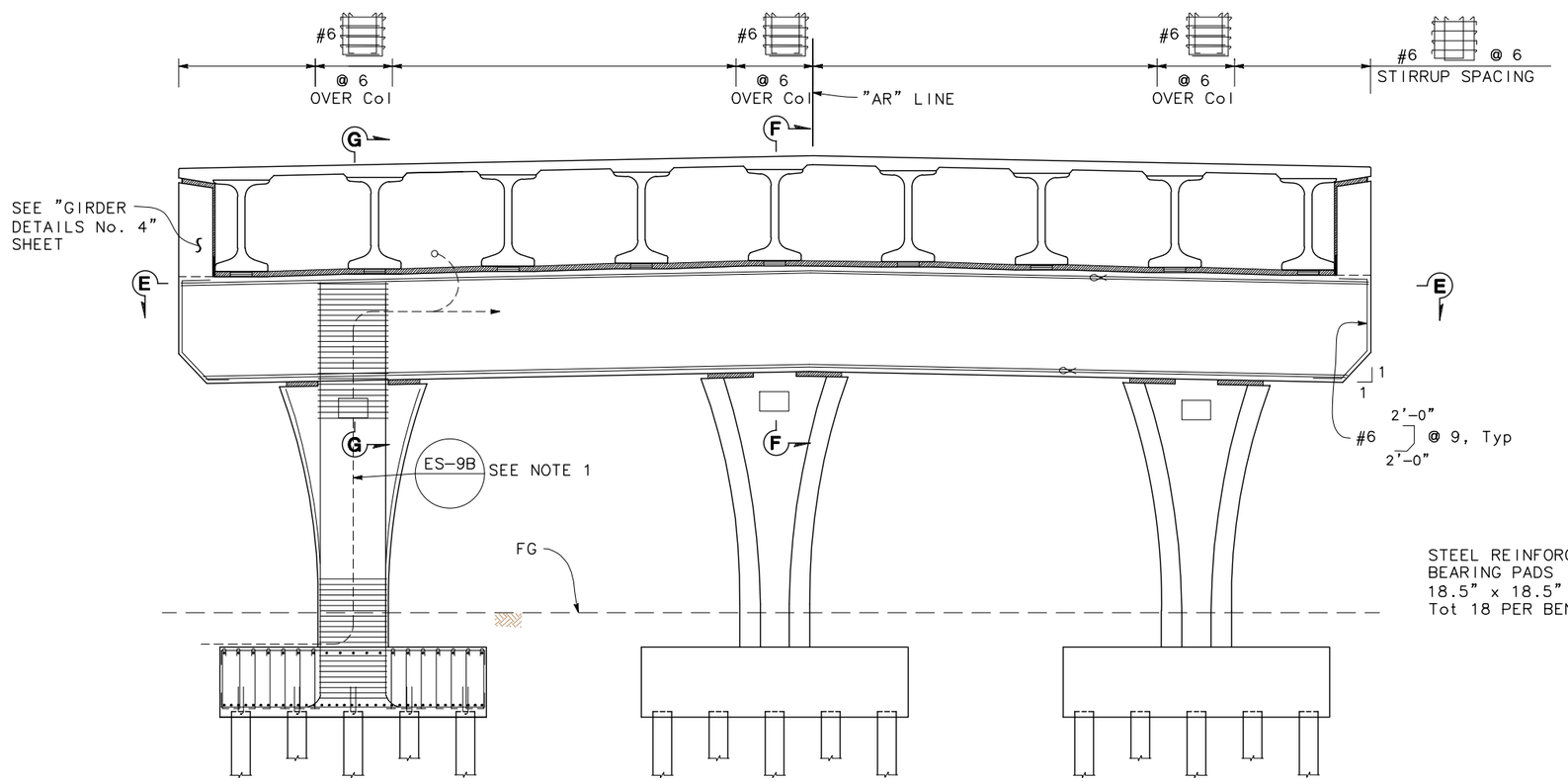

ELEVATION
3/16" = 1'-0"

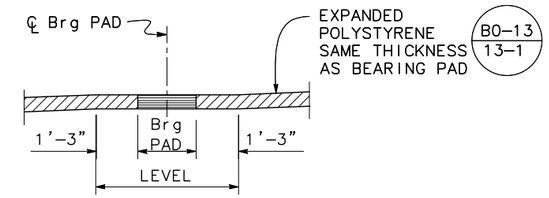

ELEVATION

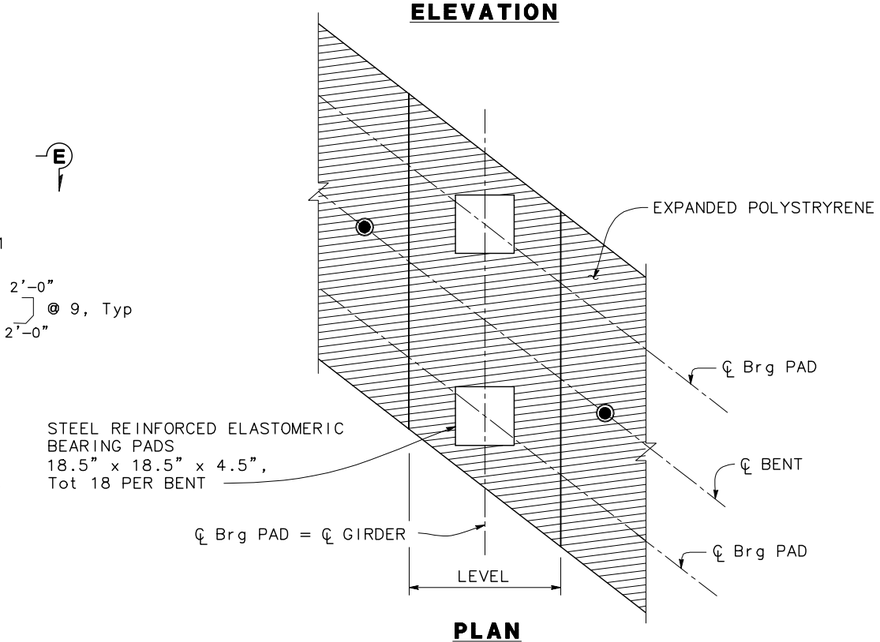

PLAN

BENT BEARING PAD DETAIL
1/2" = 1'-0"

NOTES:
1. Conduit for wall mounted lights at Bent 2 and Bent 3.
2. For SECTIONS F-F and G-G, see "BENT LAYOUT No. 2" sheet.
3. FOR SECTION E-E, see "BENT LAYOUT NO. 3" SHEET.

NOTE:
THE CONTRACTOR SHALL VERIFY ALL CONTROLLING DIMENSIONS BEFORE ORDERING OR FABRICATING ANY MATERIAL.

REZA ERFANIAN
DESIGN OVERSIGHT

SIGN OFF DATE

	BY	CHECKED
DESIGN	T. PHAM	Y. REN
DETAILS	J. DOTY	T. PHAM
QUANTITIES	C. GUARDADO	A. CLUBB/N. FELDE

PREPARED FOR THE STATE OF CALIFORNIA DEPARTMENT OF TRANSPORTATION

ERIC FREDRICKSON
PROJECT ENGINEER

BRIDGE No. 29-0351
POST MILE 4.89

AUSTIN ROAD OH (REPLACE)

BENT LAYOUT No. 1

DESIGN DETAIL SHEET (ENGLISH) (REVISION 4/19/2018)

DATE PLOTTED => 1/27/20
FILE => 09-16_Austin_BL.dwg

TIME PLOTTED => 1:07 PM
USERNAME => tpham

ORIGINAL SCALE IN INCHES FOR REDUCED PLANS 0 1 2 3

UNIT:
PROJECT NUMBER & PHASE: 101600 0038

CONTRACT No.: 10-1E7401

DISREGARD PRINTS BEARING EARLIER REVISION DATES

REVISION DATES 7/24/20 12/23/20 07/12/21

SHEET 11 OF 29

Dist	COUNTY	ROUTE	POST MILES TOTAL PROJECT	SHEET No.	TOTAL SHEETS
10	SJ	99/120	4.64/5.72 6.44/T6.76	332	349

REGISTERED CIVIL ENGINEER DATE

PLANS APPROVAL DATE

REGISTERED PROFESSIONAL ENGINEER TRUONG VIET PHAM No. 81809 Exp. 3/31/22 CIVIL STATE OF CALIFORNIA

THE STATE OF CALIFORNIA OR ITS OFFICERS OR AGENTS SHALL NOT BE RESPONSIBLE FOR THE ACCURACY OR COMPLETENESS OF SCANNED COPIES OF THIS PLAN SHEET.

SJCOG
555 E. WEBER AVE
STOCKTON, CA 95202

MARK THOMAS
701 UNIVERSITY AVENUE, SUITE 200
SACRAMENTO, CA 95825

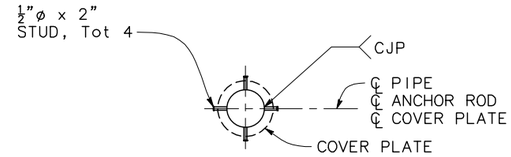

STUD DETAIL

1" = 1'-0"

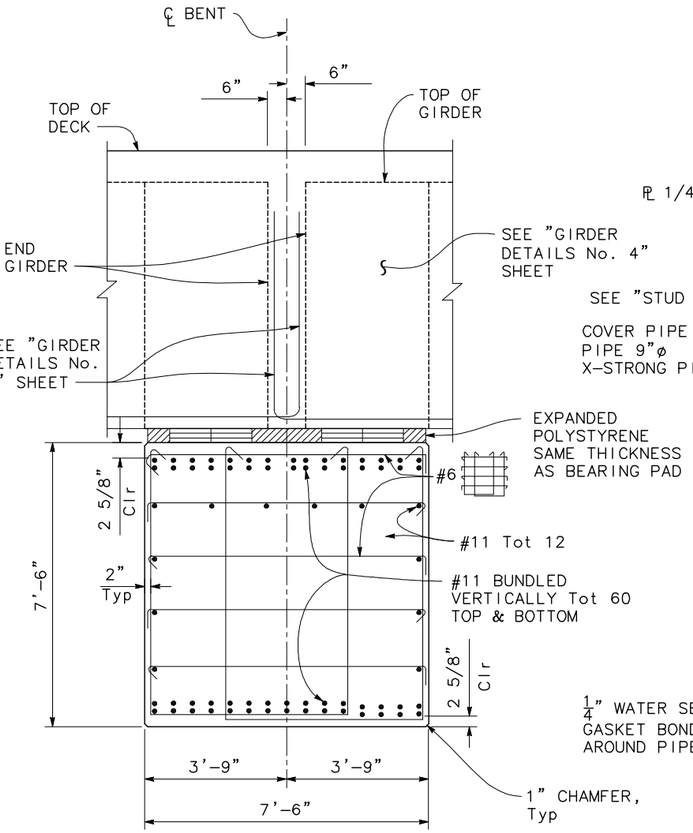

SECTION F-F

1/2" = 1'-0"

NOTE: Extend bottom row of prestressing strands 4'-0" into bent cap.
See "GIRDER DETAILS No. 1" sheet.

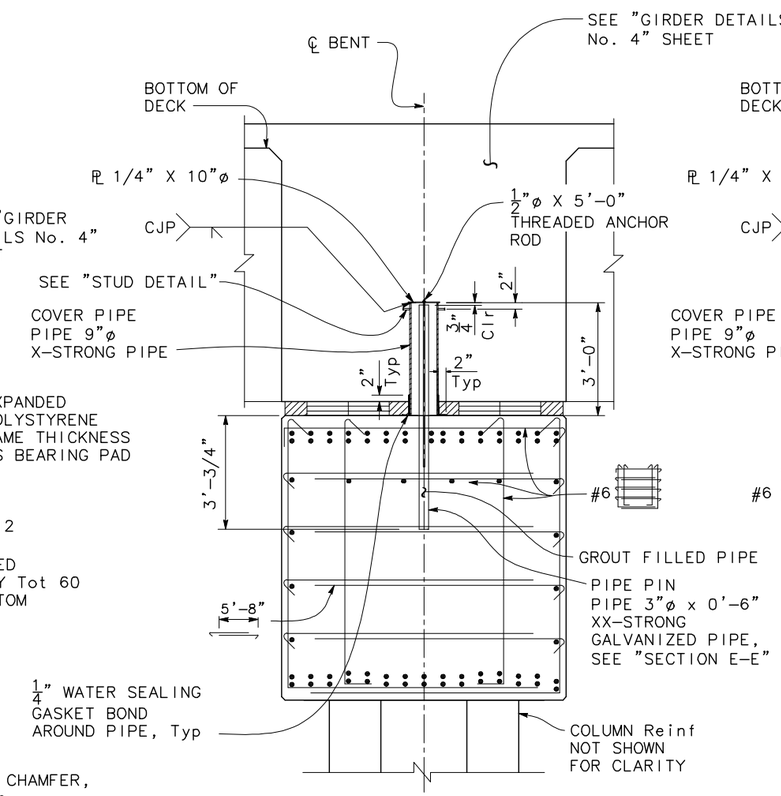

(BENT 3 & 6)

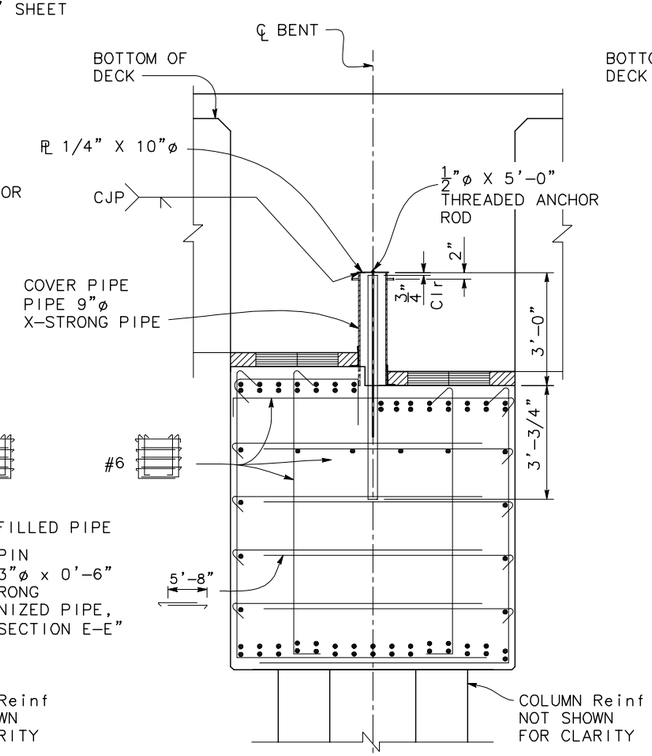

(BENT 2 & 7)

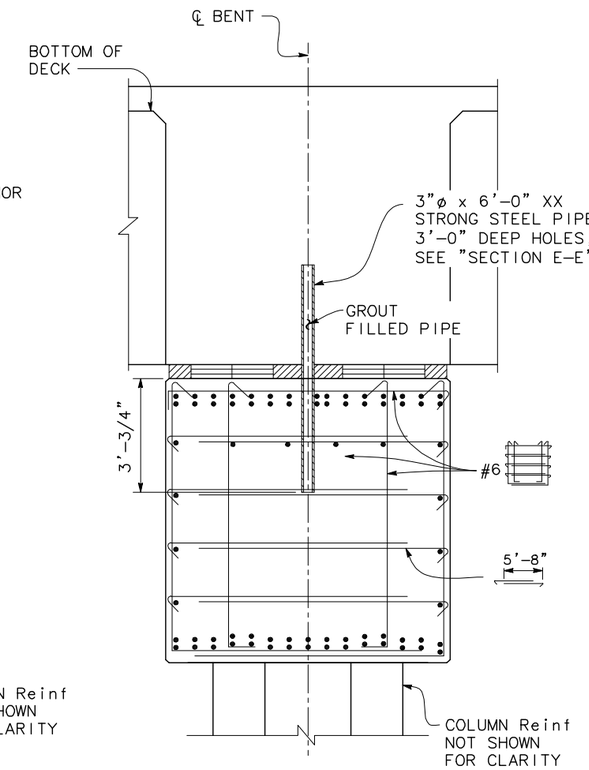

(BENT 4 & 5)

SECTION G-G

1/2" = 1'-0"

NOTE: See "SECTION F-F" for information not shown.

NOTE:
THE CONTRACTOR SHALL VERIFY ALL CONTROLLING DIMENSIONS BEFORE ORDERING OR FABRICATING ANY MATERIAL.

REZA ERFANIAN
DESIGN OVERSIGHT

SIGN OFF DATE

	BY	CHECKED
DESIGN	T. PHAM	Y. REN
DETAILS	J. DOTY	T. PHAM
QUANTITIES	C. GUARDADO	A. CLUBB/N. FELDE

PREPARED FOR THE STATE OF CALIFORNIA DEPARTMENT OF TRANSPORTATION

ERIC FREDRICKSON
PROJECT ENGINEER

BRIDGE No. 29-0351
POST MILE 4.89

AUSTIN ROAD OH (REPLACE)

BENT LAYOUT No. 2

DESIGN DETAIL SHEET (ENGLISH) (REVISION 4/19/2018)

DATE PLOTTED => 1/27/20 TIME PLOTTED => 5:57 PM
FILE => 09-16_Austin_BL.dwg USERNAME => astamaria

ORIGINAL SCALE IN INCHES FOR REDUCED PLANS 0 1 2 3

UNIT:
PROJECT NUMBER & PHASE: 101600 0038 CONTRACT No.: 10-1E7401

DISREGARD PRINTS BEARING EARLIER REVISION DATES

REVISION DATES 7/24/20 12/25/20 07/12/21

SHEET 12 OF 29

Dist	COUNTY	ROUTE	POST MILES TOTAL PROJECT	SHEET No.	TOTAL SHEETS
10	SJ	99/120	4.64/5.72 6.44/T6.76	333	349

REGISTERED CIVIL ENGINEER DATE

PLANS APPROVAL DATE

REGISTERED PROFESSIONAL ENGINEER TRUONG VIET PHAM No. 81809 Exp. 3/31/22 CIVIL STATE OF CALIFORNIA

THE STATE OF CALIFORNIA OR ITS OFFICERS OR AGENTS SHALL NOT BE RESPONSIBLE FOR THE ACCURACY OR COMPLETENESS OF SCANNED COPIES OF THIS PLAN SHEET.

SJCOG
555 E. WEBER AVE
STOCKTON, CA 95202

MARK THOMAS
701 UNIVERSITY AVENUE, SUITE 200
SACRAMENTO, CA 95825

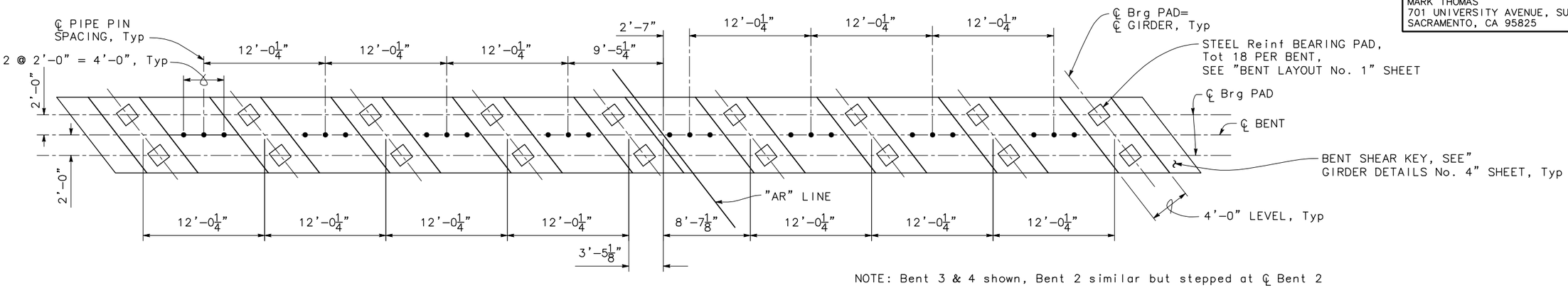

NOTE: Bent 3 & 4 shown, Bent 2 similar but stepped at ℄ Bent 2

SECTION E-E (BENT 3 & 4)

1/8" = 1'-0"

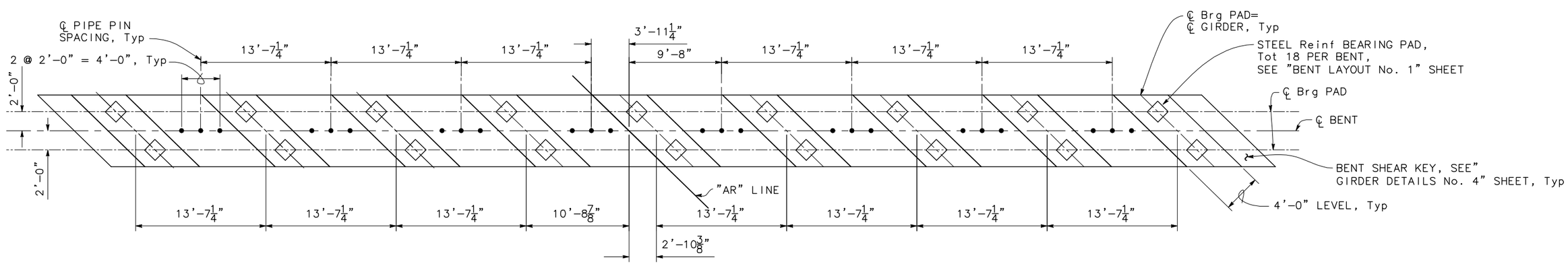

NOTE: Bent 5 & 6 shown, Bent 7 similar but stepped at ℄ Bent 7

SECTION E-E (BENT 5 & 6)

1/8" = 1'-0"

NOTE:
THE CONTRACTOR SHALL VERIFY ALL CONTROLLING DIMENSIONS BEFORE ORDERING OR FABRICATING ANY MATERIAL.

REZA ERFANIAN
DESIGN OVERSIGHT

SIGN OFF DATE

	BY	CHECKED
DESIGN	T. PHAM	Y. REN
DETAILS	J. DOTY	T. PHAM
QUANTITIES	C. GUARDADO	A. CLUBB/N. FELDE

PREPARED FOR THE STATE OF CALIFORNIA DEPARTMENT OF TRANSPORTATION

ERIC FREDRICKSON
PROJECT ENGINEER

BRIDGE No. 29-0351
POST MILE 4.89

AUSTIN ROAD OH (REPLACE)

BENT LAYOUT No. 3

DESIGN DETAIL SHEET (ENGLISH) (REVISION 4/19/2018)

DATE PLOTTED =>1/27/20 TIME PLOTTED =>1:07 PM
FILE =>09-16_Austin_BL.dwg USERNAME =>tpham

ORIGINAL SCALE IN INCHES FOR REDUCED PLANS 0 1 2 3

UNIT:
PROJECT NUMBER & PHASE: 101600 0038 CONTRACT No.: 10-1E7401

DISREGARD PRINTS BEARING EARLIER REVISION DATES

REVISION DATES 7/24/20 12/23/20 07/12/21

SHEET 13 OF 29

Dist	COUNTY	ROUTE	POST MILES TOTAL PROJECT	SHEET No.	TOTAL SHEETS
10	SJ	99/120	4.64/5.72 6.44/T6.76	334	349

REGISTERED CIVIL ENGINEER DATE

PLANS APPROVAL DATE

REGISTERED PROFESSIONAL ENGINEER TRUONG VIET PHAM No. 81809 Exp. 3/31/22 CIVIL STATE OF CALIFORNIA

THE STATE OF CALIFORNIA OR ITS OFFICERS OR AGENTS SHALL NOT BE RESPONSIBLE FOR THE ACCURACY OR COMPLETENESS OF SCANNED COPIES OF THIS PLAN SHEET.

SJCOG
555 E. WEBER AVE
STOCKTON, CA 95202

MARK THOMAS
701 UNIVERSITY AVENUE, SUITE 200
SACRAMENTO, CA 95825

NOTE:
Dimension measured from top of hoop to top of bent cap.

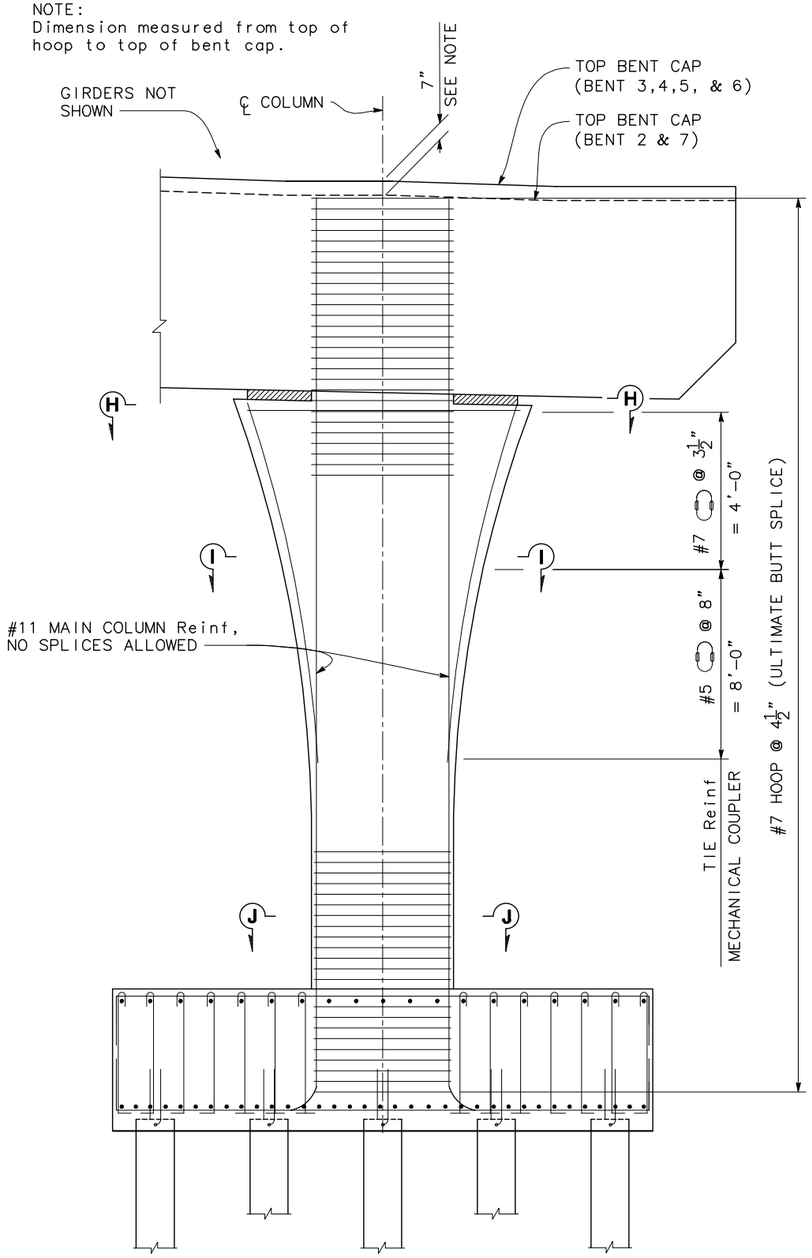

COLUMN ELEVATION
3/8" = 1'-0"

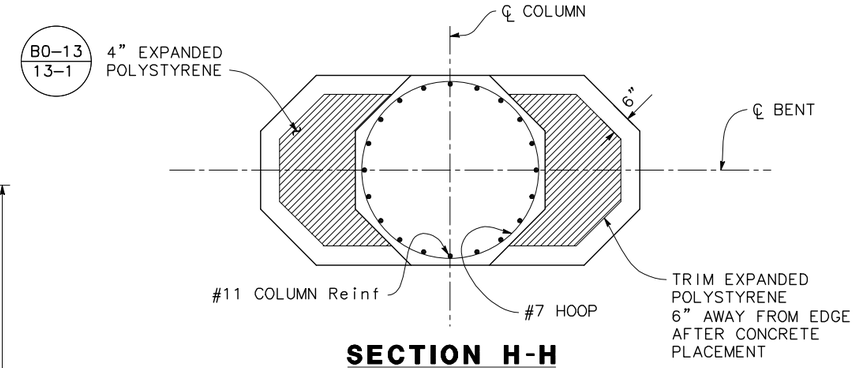

SECTION H-H
1/2" = 1'-0"

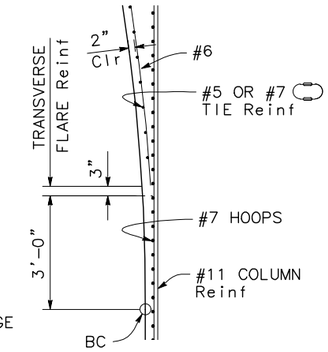

HOOP AND TIE DETAILS
NO SCALE

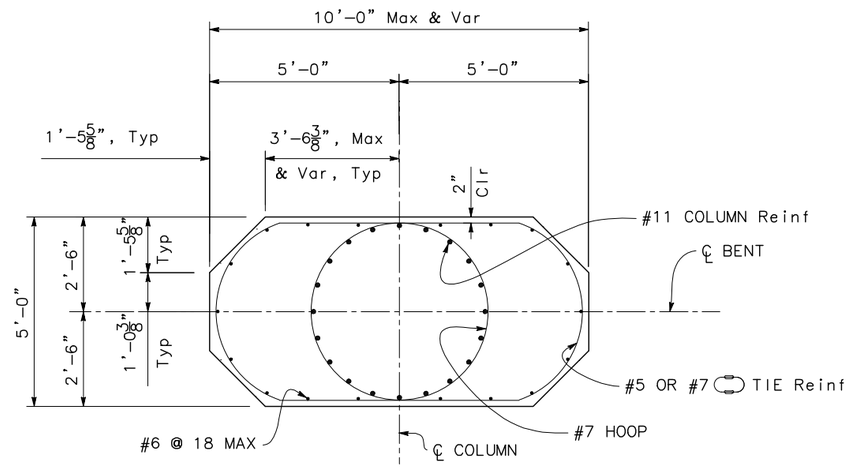

SECTION I-I
1/2" = 1'-0"

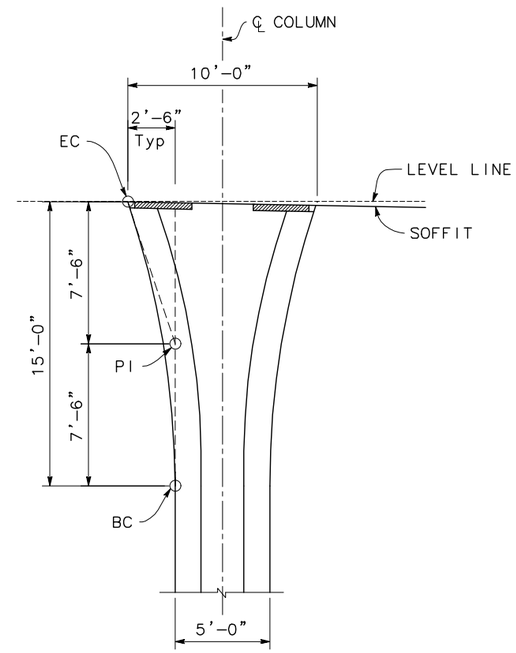

COLUMN FLARE DETAIL
1/4" = 1'-0"

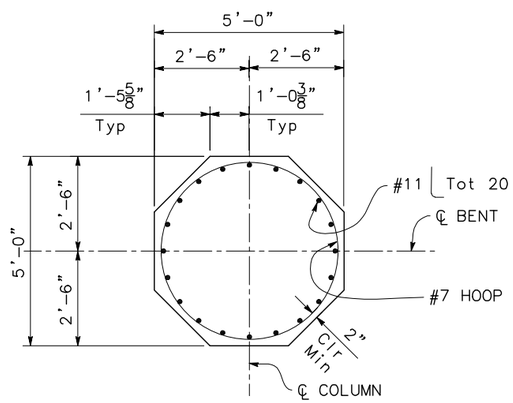

SECTION J-J
1/2" = 1'-0"

NOTE:
THE CONTRACTOR SHALL VERIFY ALL CONTROLLING DIMENSIONS BEFORE ORDERING OR FABRICATING ANY MATERIAL.

REZA ERFANIAN
DESIGN OVERSIGHT

SIGN OFF DATE

	BY	CHECKED
DESIGN	T. PHAM	Y. REN
DETAILS	J. DOTY	T. PHAM
QUANTITIES	C. GUARDADO	A. CLUBB/N. FELDE

PREPARED FOR THE STATE OF CALIFORNIA DEPARTMENT OF TRANSPORTATION

ERIC FREDRICKSON
PROJECT ENGINEER

BRIDGE No. 29-0351
POST MILE 4.89

AUSTIN ROAD OH (REPLACE)
BENT DETAILS No. 1

DESIGN DETAIL SHEET (ENGLISH) (REVISION 4/19/2018)

DATE PLOTTED => 1/27/20
FILE => 09-16_Austin_BL.dwg

TIME PLOTTED => 1:07 PM
USERNAME => tpham

ORIGINAL SCALE IN INCHES FOR REDUCED PLANS 0 1 2 3

UNIT:
PROJECT NUMBER & PHASE: 101600 0038

CONTRACT No.: 10-1E7401

DISREGARD PRINTS BEARING EARLIER REVISION DATES

REVISION DATES 7/24/20 12/25/20 07/12/21

SHEET 14 OF 29

Dist	COUNTY	ROUTE	POST MILES TOTAL PROJECT	SHEET No.	TOTAL SHEETS
10	SJ	99/120	4.64/5.72 6.44/T6.76	335	349

REGISTERED CIVIL ENGINEER DATE

PLANS APPROVAL DATE

REGISTERED PROFESSIONAL ENGINEER TRUONG VIET PHAM No. 81809 Exp. 3/31/22 CIVIL STATE OF CALIFORNIA

THE STATE OF CALIFORNIA OR ITS OFFICERS OR AGENTS SHALL NOT BE RESPONSIBLE FOR THE ACCURACY OR COMPLETENESS OF SCANNED COPIES OF THIS PLAN SHEET.

SJCOG
555 E. WEBER AVE
STOCKTON, CA 95202

MARK THOMAS
701 UNIVERSITY AVENUE, SUITE 200
SACRAMENTO, CA 95825

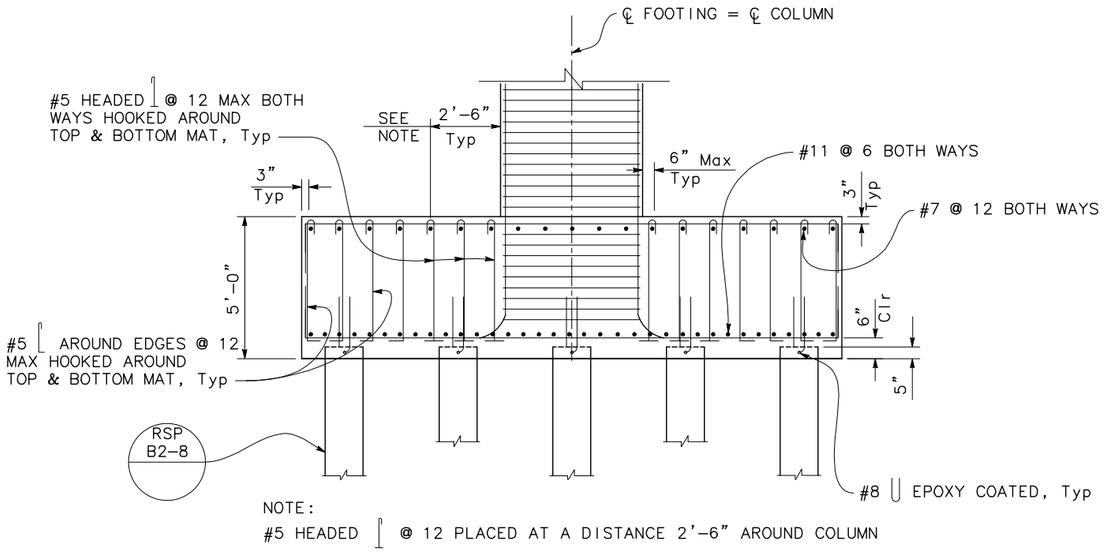

NOTE:
#5 HEADED @ 12 PLACED AT A DISTANCE 2'-6" AROUND COLUMN

FOOTING ELEVATION
3/8" = 1'-0"

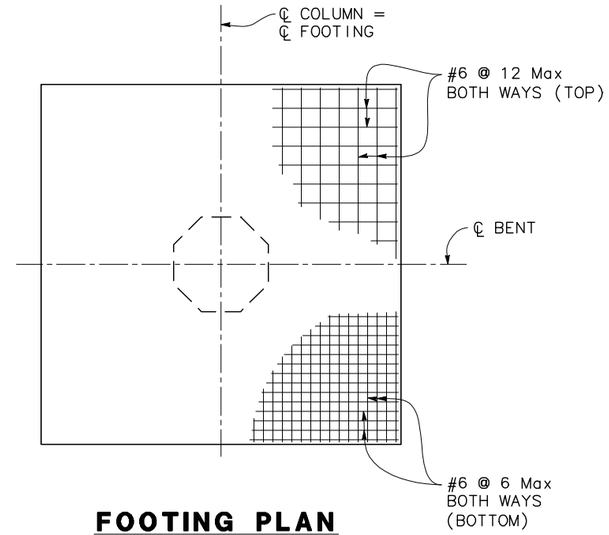

FOOTING PLAN
1/4" = 1'-0"

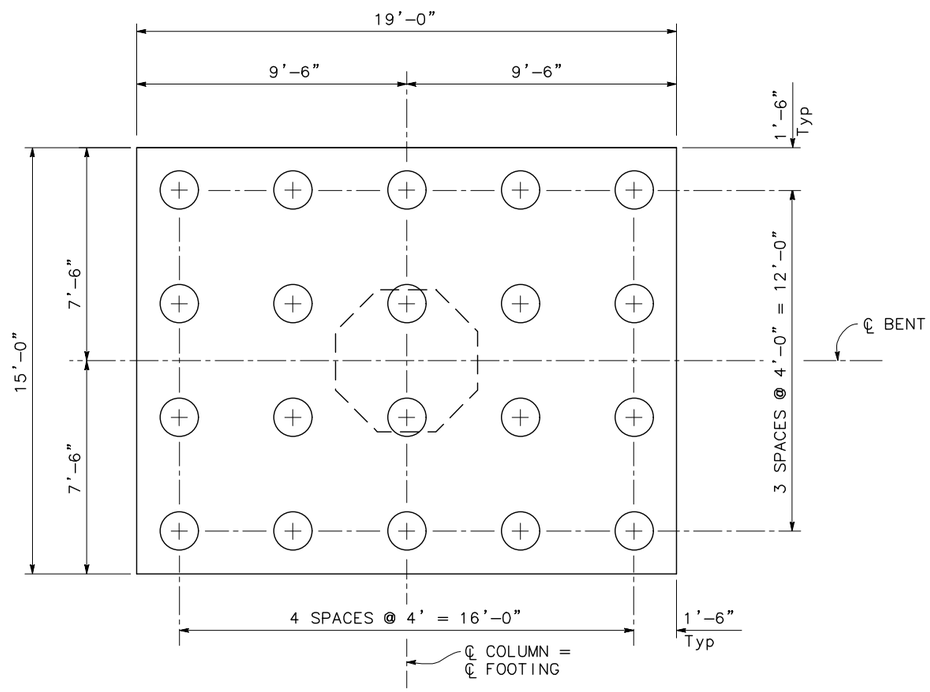

PILE LAYOUT (BENT 2, 3, 4 & 5)
3/8" = 1'-0"

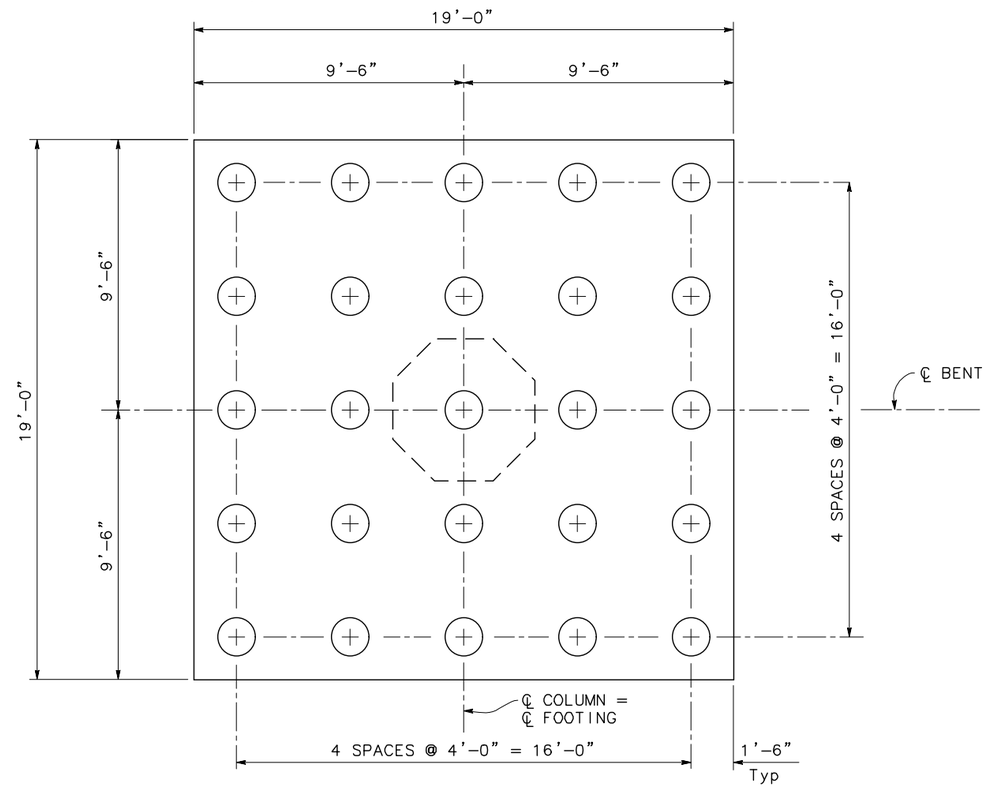

PILE LAYOUT (BENT 7)
3/8" = 1'-0"

NOTE:
THE CONTRACTOR SHALL VERIFY ALL CONTROLLING DIMENSIONS BEFORE ORDERING OR FABRICATING ANY MATERIAL.

REZA ERFANIAN
DESIGN OVERSIGHT

SIGN OFF DATE

	BY	CHECKED
DESIGN	T. PHAM	Y. REN
DETAILS	J. DOTY	T. PHAM
QUANTITIES	C. GUARDADO	A. CLUBB/N. FELDE

PREPARED FOR THE STATE OF CALIFORNIA DEPARTMENT OF TRANSPORTATION

ERIC FREDRICKSON
PROJECT ENGINEER

BRIDGE No. 29-0351
POST MILE 4.89

AUSTIN ROAD OH (REPLACE)
BENT DETAILS No. 2

DESIGN DETAIL SHEET (ENGLISH) (REVISION 4/19/2018)

DATE PLOTTED => 1/27/20
FILE => 09-16_Austin_BL.dwg
TIME PLOTTED => 1:07 PM
USERNAME => tpham

ORIGINAL SCALE IN INCHES FOR REDUCED PLANS 0 1 2 3

UNIT:
PROJECT NUMBER & PHASE: 101600 0038
CONTRACT No.: 10-1E7401

DISREGARD PRINTS BEARING EARLIER REVISION DATES

REVISION DATES 7/24/20 12/23/20 07/12/21

SHEET 15 OF 29

Dist	COUNTY	ROUTE	POST MILES TOTAL PROJECT	SHEET No.	TOTAL SHEETS
10	SJ	99/120	4.64/5.72 6.44/T6.76	336	349

REGISTERED CIVIL ENGINEER DATE

PLANS APPROVAL DATE

REGISTERED PROFESSIONAL ENGINEER
TRUONG VIET PHAM
No. 81809
Exp. 3/31/22
CIVIL
STATE OF CALIFORNIA

THE STATE OF CALIFORNIA OR ITS OFFICERS OR AGENTS SHALL NOT BE RESPONSIBLE FOR THE ACCURACY OR COMPLETENESS OF SCANNED COPIES OF THIS PLAN SHEET.

SJCOG
555 E. WEBER AVE
STOCKTON, CA 95202

MARK THOMAS
701 UNIVERSITY AVENUE, SUITE 200
SACRAMENTO, CA 95825

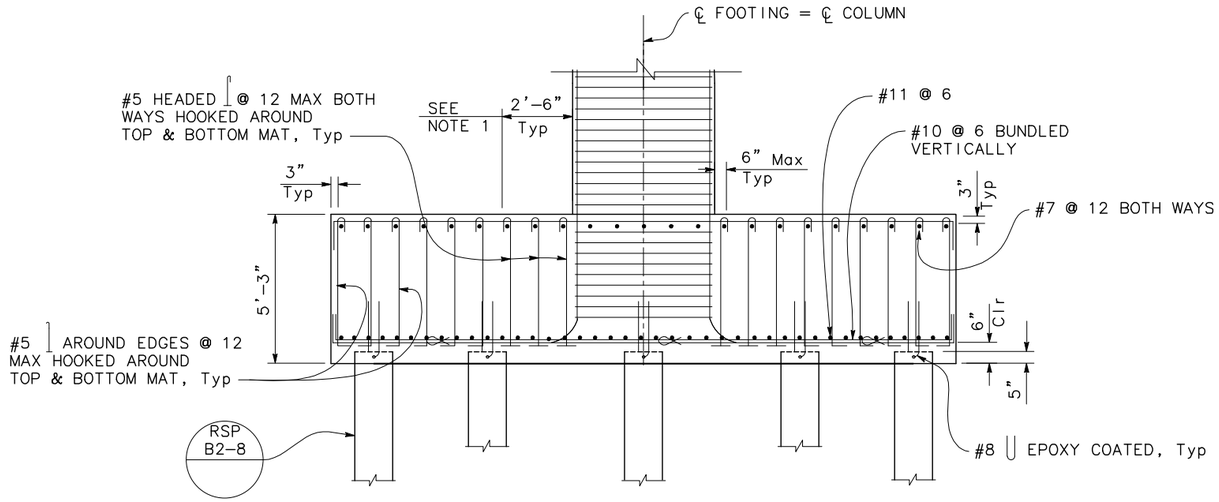

CENTER FOOTING ELEVATION (BENT 6)

3/8" = 1'-0"

NOTES:

1. #5 Headed ⌊ @ 12 placed at a distance 2'-6" around column.
2. For other Bent 6 footing reinforcement, see "BENT DETAILS No. 2" sheet.

NOTE:
Alternative pile layout must be submitted for review and approval.

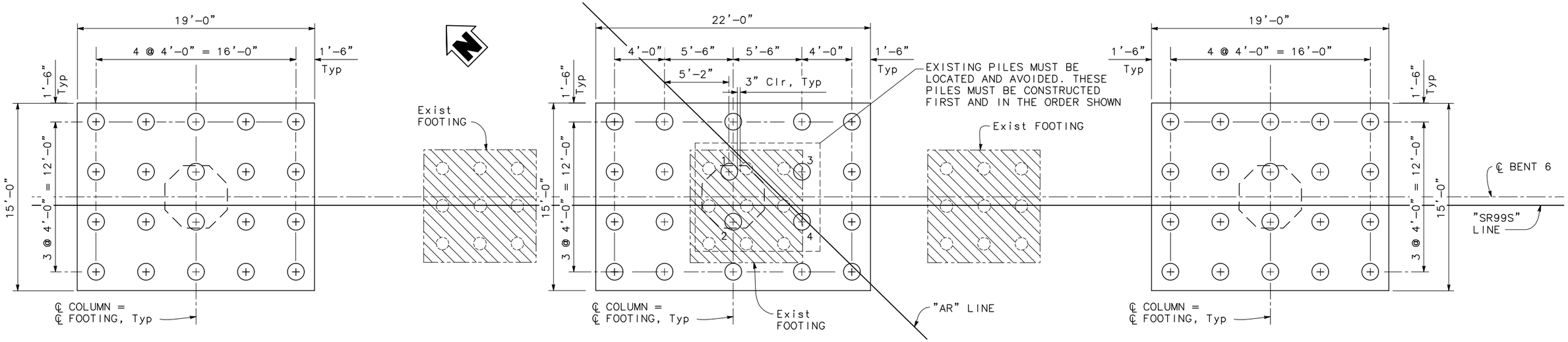

FOOTING PLAN (BENT 6)

1/4" = 1'-0"

LEGEND:

- ⊕ Indicates New Piles
- ◌ Indicates Exist PCC Piles
- ▨ Indicates Exist Footing Removal

NOTE:
THE CONTRACTOR SHALL VERIFY ALL CONTROLLING DIMENSIONS BEFORE ORDERING OR FABRICATING ANY MATERIAL.

REZA ERFANIAN
DESIGN OVERSIGHT

SIGN OFF DATE

	BY	CHECKED
DESIGN	T. PHAM	Y. REN
DETAILS	J. DOTY	T. PHAM
QUANTITIES	C. GUARDADO	A. CLUBB/N. FELDE

PREPARED FOR THE STATE OF CALIFORNIA DEPARTMENT OF TRANSPORTATION

ERIC FREDRICKSON
PROJECT ENGINEER

BRIDGE No. 29-0351
POST MILE 4.89

AUSTIN ROAD OH (REPLACE)

BENT DETAILS No. 3

DESIGN DETAIL SHEET (ENGLISH) (REVISION 4/19/2018)

DATE PLOTTED => 1/27/20
FILE => 09-16_Austin_BL.dwg
TIME PLOTTED => 1:07 PM
USERNAME => tpham
ORIGINAL SCALE IN INCHES FOR REDUCED PLANS 0 1 2 3

UNIT:
PROJECT NUMBER & PHASE: 101600 0038
CONTRACT No.: 10-1E7401

DISREGARD PRINTS BEARING EARLIER REVISION DATES
REVISION DATES 7/24/20 12/25/20 07/12/21

SHEET 16 OF 29

Dist	COUNTY	ROUTE	POST MILES TOTAL PROJECT	SHEET No.	TOTAL SHEETS
10	SJ	99/120	4.64/5.72 6.44/T6.76	----	349

REGISTERED CIVIL ENGINEER DATE

PLANS APPROVAL DATE

REGISTERED PROFESSIONAL ENGINEER TRUONG VIET PHAM No. 81809 Exp. 3/31/22 CIVIL STATE OF CALIFORNIA

THE STATE OF CALIFORNIA OR ITS OFFICERS OR AGENTS SHALL NOT BE RESPONSIBLE FOR THE ACCURACY OR COMPLETENESS OF SCANNED COPIES OF THIS PLAN SHEET.

SJCOG
555 E. WEBER AVE
STOCKTON, CA 95202

MARK THOMAS
701 UNIVERSITY AVENUE, SUITE 200
SACRAMENTO, CA 95825

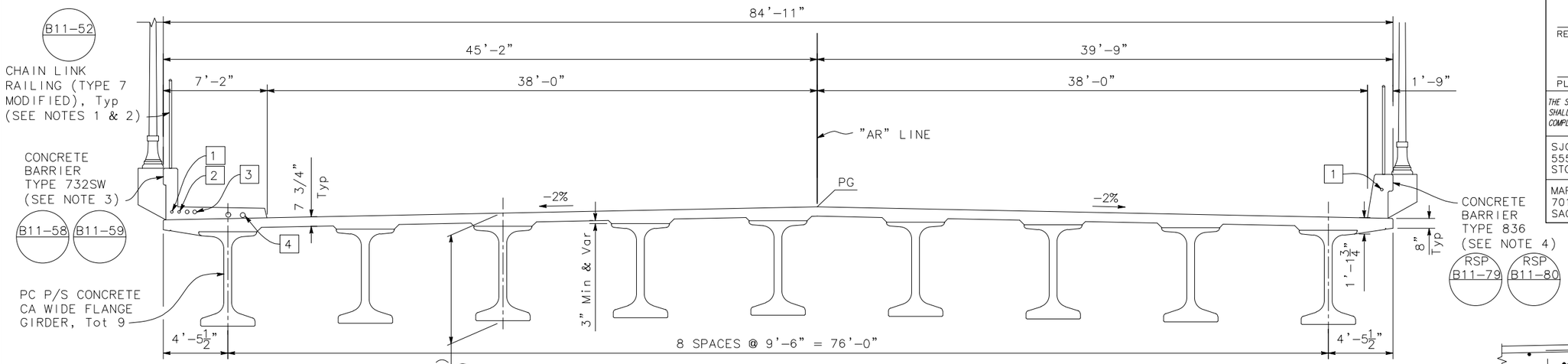

TYPICAL SECTION

1/4" = 1'-0"

1 (1) CONDUIT (LIGHTING)
2 (1) 2"ø CONDUIT (SIGNAL)
3 (2) 3"ø CONDUIT (SIC, FUTURE)
4 (2) 4"ø CONDUIT (FUTURE)

NOTES:

1. See Standard Plans B11-52 for span 2, 4, 5, 6 & 7. Railing height modified for Span 3, see "CHAIN LINK RAILING TYPE 7 Mod" details.
2. Chain Link mesh must be black vinyl coated.
3. Concrete Barrier Type 732SW pay limit to the end of the approach slabs.
4. Concrete Barrier Type 836 pay limit to the end of the Wingwalls.
5. Provide additional top transverse reinforcement in the overhang for a distance of 5 feet on either side of an expansion joint in the barrier rail, and at ends of the barrier rail. This reinforcement must consist of rebars that are the same as that of the transverse bars, and must be bundled with each alternating top transverse bar in the overhang

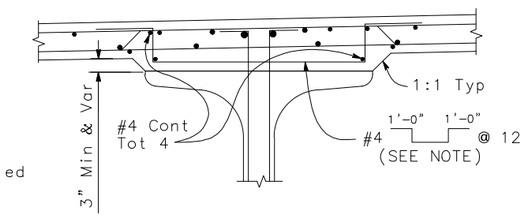

HAUNCH DETAIL

NO SCALE

NOTE:
Reinf shown is in addition to "PART TYPICAL SECTION" Reinf

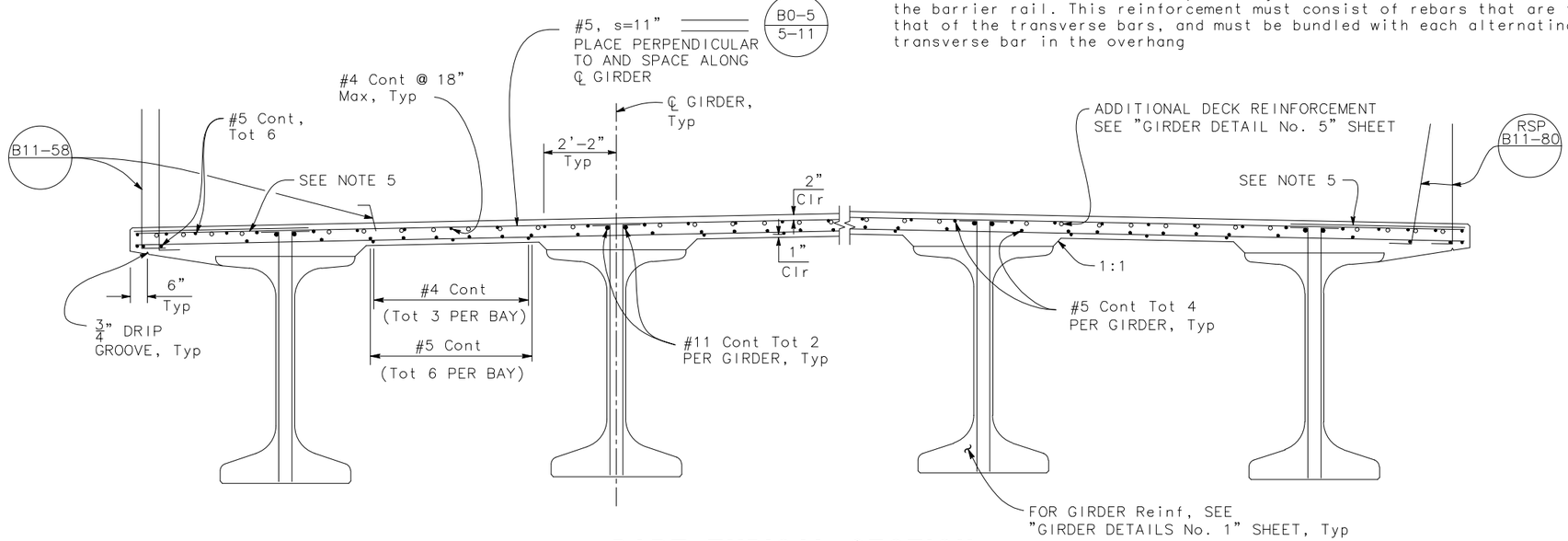

PART TYPICAL SECTION

1/2" = 1'-0"

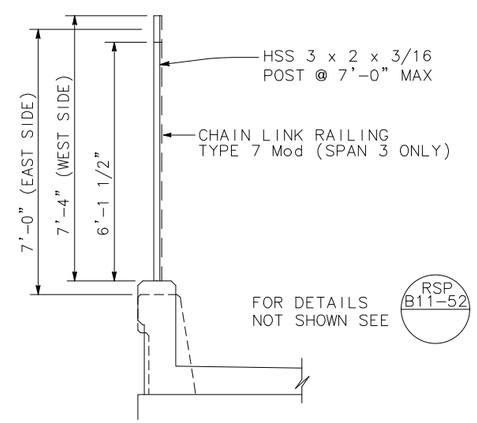

CHAIN LINK RAILING TYPE 7 Mod

NO SCALE

NOTE:
THE CONTRACTOR SHALL VERIFY ALL CONTROLLING DIMENSIONS BEFORE ORDERING OR FABRICATING ANY MATERIAL.

REZA ERFANIAN
DESIGN OVERSIGHT

SIGN OFF DATE

	BY	CHECKED
DESIGN	T. PHAM	Y. REN
DETAILS	J. DOTY	T. PHAM
QUANTITIES	C. GUARDADO	A. CLUBB/N. FELDE

PREPARED FOR THE STATE OF CALIFORNIA DEPARTMENT OF TRANSPORTATION

ERIC FREDRICKSON
PROJECT ENGINEER

BRIDGE No. 29-0351
POST MILE 4.89

AUSTIN ROAD OH (REPLACE)

TYPICAL SECTION

DESIGN DETAIL SHEET (ENGLISH) (REVISION 4/19/2018)

DATE PLOTTED => 1/27/20
FILE =>17_Austin_TS.dwg

TIME PLOTTED =>8:24 PM
USERNAME => tpham

ORIGINAL SCALE IN INCHES FOR REDUCED PLANS 0 1 2 3

UNIT:
PROJECT NUMBER & PHASE: 101600 0038

CONTRACT No.: 10-1E7401

DISREGARD PRINTS BEARING EARLIER REVISION DATES

REVISION DATES 7/24/20 12/23/20 07/12/21

SHEET 17 OF 29

Dist	COUNTY	ROUTE	POST MILES TOTAL PROJECT	SHEET No.	TOTAL SHEETS
10	SJ	99/120	4.64/5.72 6.44/T6.76	338	349

REGISTERED CIVIL ENGINEER DATE

PLANS APPROVAL DATE

REGISTERED PROFESSIONAL ENGINEER TRUONG VIET PHAM No. 81809 Exp. 3/31/22 CIVIL STATE OF CALIFORNIA

THE STATE OF CALIFORNIA OR ITS OFFICERS OR AGENTS SHALL NOT BE RESPONSIBLE FOR THE ACCURACY OR COMPLETENESS OF SCANNED COPIES OF THIS PLAN SHEET.

SJCOG
555 E. WEBER AVE
STOCKTON, CA 95202

MARK THOMAS
701 UNIVERSITY AVENUE, SUITE 200
SACRAMENTO, CA 95825

NOTES:
1. All girders must be braced laterally to prevent tipping until diaphragm are poured and cured.
2. Areas marked (1) must be placed before areas marked (2), but areas of the same number need not be placed simultaneously.
3. Intermediate diaphragms must be placed prior to deck.
4. Placement of areas marked (2) shall not commence until at least 48 hours have elapsed after completion of placement of areas marked (1).
5. Bent diaphragms shall be placed simultaneously with the adjacent deck area.
6. Construction joint per Standard Plan BO-5.
7. The Contractor must submit a Deck Pour Schedule to the Engineer for approval prior to placing concrete.

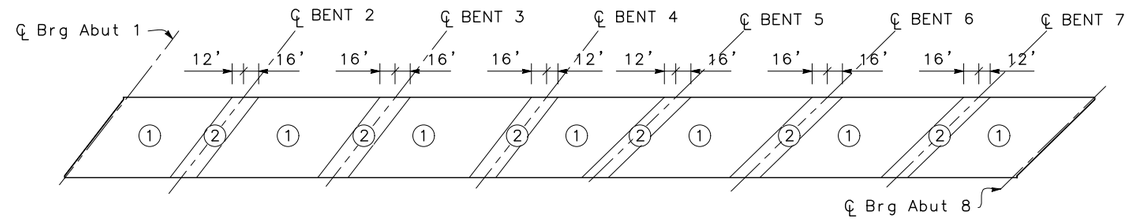

DECK PLACEMENT SEQUENCE

NO SCALE

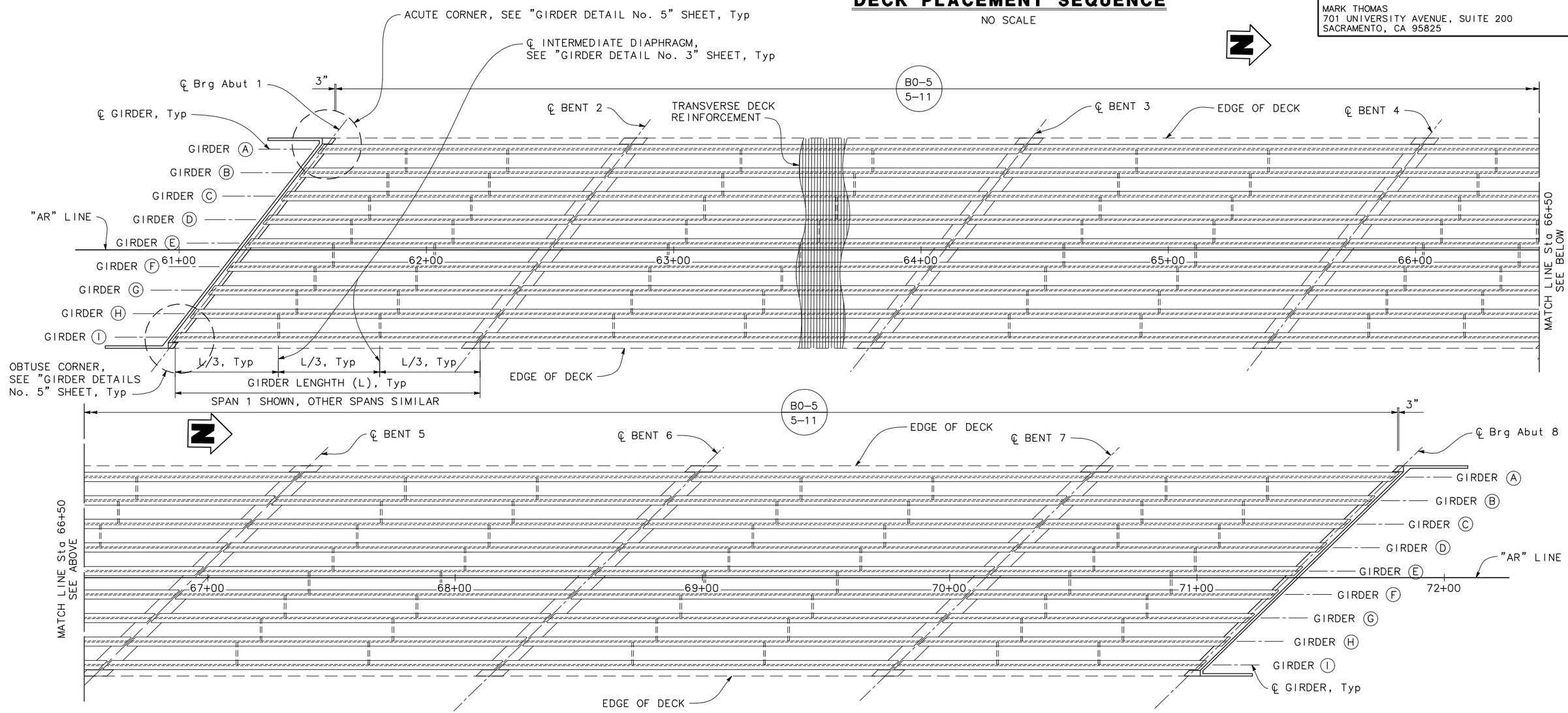

GIRDER LAYOUT

1" = 40'

NOTE:
THE CONTRACTOR SHALL VERIFY ALL CONTROLLING DIMENSIONS BEFORE ORDERING OR FABRICATING ANY MATERIAL.

REZA ERFANIAN
DESIGN OVERSIGHT

SIGN OFF DATE

	BY	CHECKED
DESIGN	T. PHAM	Y. REN
DETAILS	J. DOTY	T. PHAM
QUANTITIES	C. GUARDADO	A. CLUBB/N. FELDE

PREPARED FOR THE STATE OF CALIFORNIA DEPARTMENT OF TRANSPORTATION

ERIC FREDRICKSON
PROJECT ENGINEER

BRIDGE No. 29-0351
POST MILE 4.89

AUSTIN ROAD OH (REPLACE)

GIRDER LAYOUT

DESIGN DETAIL SHEET (ENGLISH) (REVISION 4/19/2018)

DATE PLOTTED => 1/27/20
FILE => 18-23_Austin_GL.dwg

TIME PLOTTED => 5:58 PM
USERNAME => astamaria

ORIGINAL SCALE IN INCHES FOR REDUCED PLANS 0 1 2 3

UNIT:
PROJECT NUMBER & PHASE: 101600 0038

CONTRACT No.: 10-1E7401

DISREGARD PRINTS BEARING EARLIER REVISION DATES

REVISION DATES 7/24/20 12/25/20 07/12/21

SHEET 18 OF 29

Dist	COUNTY	ROUTE	POST MILES TOTAL PROJECT	SHEET No.	TOTAL SHEETS
10	SJ	99/120	4.64/5.72 6.44/T6.76	339	349

REGISTERED CIVIL ENGINEER DATE

PLANS APPROVAL DATE

REGISTERED PROFESSIONAL ENGINEER
TRUONG VIET PHAM
No. 81809
Exp. 3/31/22
CIVIL
STATE OF CALIFORNIA

THE STATE OF CALIFORNIA OR ITS OFFICERS OR AGENTS SHALL NOT BE RESPONSIBLE FOR THE ACCURACY OR COMPLETENESS OF SCANNED COPIES OF THIS PLAN SHEET.

SJCOG
555 E. WEBER AVE
STOCKTON, CA 95202

MARK THOMAS
701 UNIVERSITY AVENUE, SUITE 200
SACRAMENTO, CA 95825

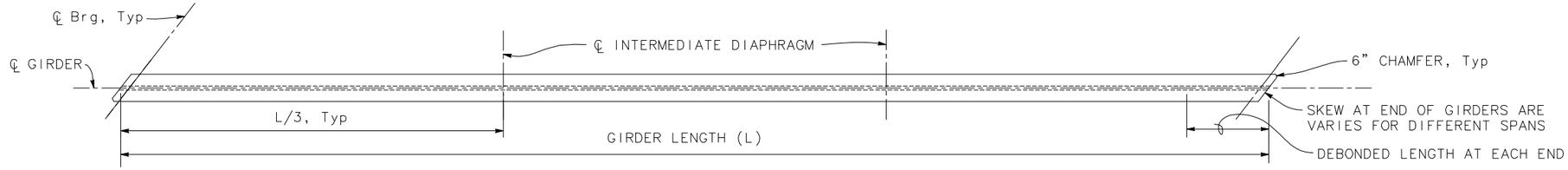

PLAN
NO SCALE

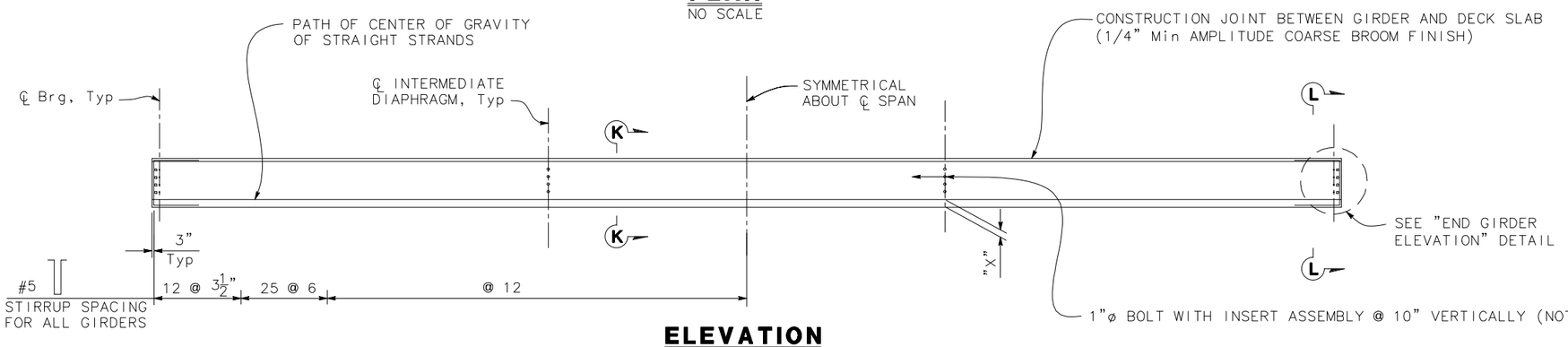

ELEVATION
NO SCALE

NOTES:
1. Girder stirrups shall be field bent after girder erection.
2. Insert assemblies see details on "GIRDER DETAIL No. 3" sheet.
3. Form holes shall be parallel to ℄ Brg.
4. Girder ends to be cast such that a level surface is provided at bearing pads.

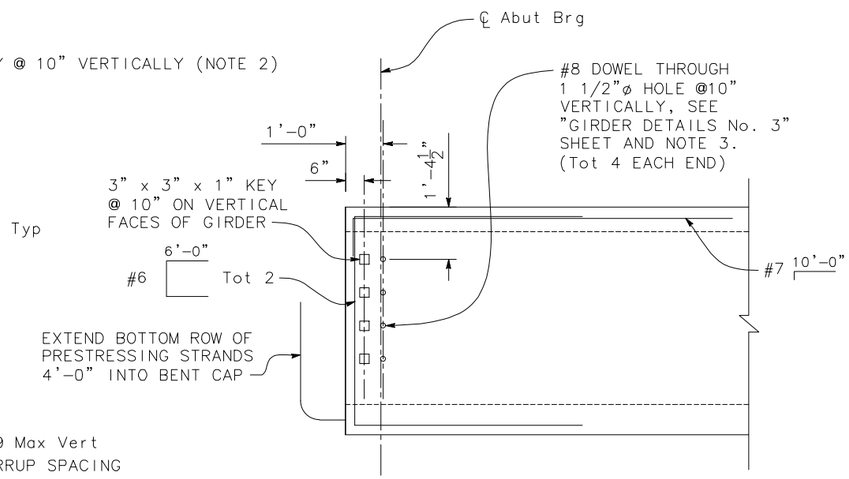

END GIRDER ELEVATION
NO SCALE

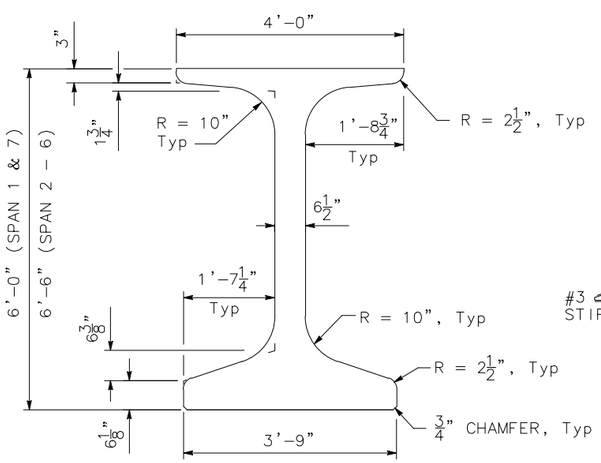

TYPICAL GIRDER SECTION
3/4" = 1'-0"

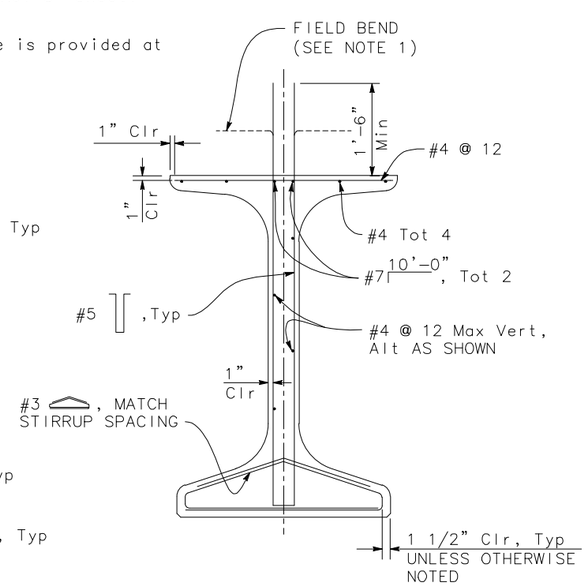

SECTION K-K
3/4" = 1'-0"

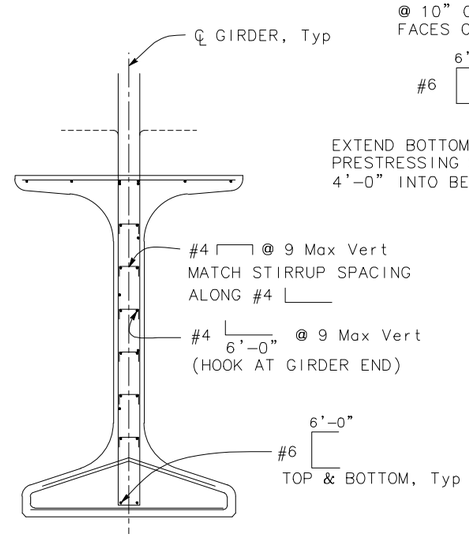

SECTION L-L
3/4" = 1'-0"

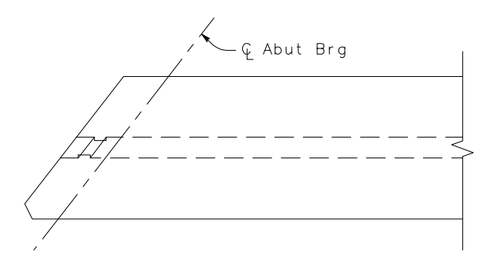

END GIRDER PLAN
NO SCALE

NOTE:
THE CONTRACTOR SHALL VERIFY ALL CONTROLLING DIMENSIONS BEFORE ORDERING OR FABRICATING ANY MATERIAL.

REZA ERFANIAN
DESIGN OVERSIGHT

SIGN OFF DATE

	BY	CHECKED
DESIGN	T. PHAM	Y. REN
DETAILS	J. DOTY	T. PHAM
QUANTITIES	C. GUARDADO	A. CLUBB/N. FELDE

PREPARED FOR THE STATE OF CALIFORNIA DEPARTMENT OF TRANSPORTATION

ERIC FREDRICKSON
PROJECT ENGINEER

BRIDGE No. 29-0351
POST MILE 4.89

AUSTIN ROAD OH (REPLACE)
GIRDER DETAILS No. 1

DESIGN DETAIL SHEET (ENGLISH) (REVISION 4/19/2018)

DATE PLOTTED =>1/27/20
FILE =>18-23_Austin_GL.dwg
TIME PLOTTED =>9:17 AM
USERNAME =>tpham
ORIGINAL SCALE IN INCHES FOR REDUCED PLANS 0 1 2 3

UNIT:
PROJECT NUMBER & PHASE: 101600 0038
CONTRACT No.: 10-1E7401

DISREGARD PRINTS BEARING EARLIER REVISION DATES → 7/24/20 12/23/20 07/12/21

SHEET 19 OF 29

Dist	COUNTY	ROUTE	POST MILES TOTAL PROJECT	SHEET No.	TOTAL SHEETS
10	SJ	99/120	4.64/5.72 6.44/T6.76	340	349

REGISTERED CIVIL ENGINEER DATE

PLANS APPROVAL DATE

REGISTERED PROFESSIONAL ENGINEER TRUONG VIET PHAM No. 81809 Exp. 3/31/22 CIVIL STATE OF CALIFORNIA

THE STATE OF CALIFORNIA OR ITS OFFICERS OR AGENTS SHALL NOT BE RESPONSIBLE FOR THE ACCURACY OR COMPLETENESS OF SCANNED COPIES OF THIS PLAN SHEET.

SJCOG
555 E. WEBER AVE
STOCKTON, CA 95202

MARK THOMAS
701 UNIVERSITY AVENUE, SUITE 200
SACRAMENTO, CA 95825

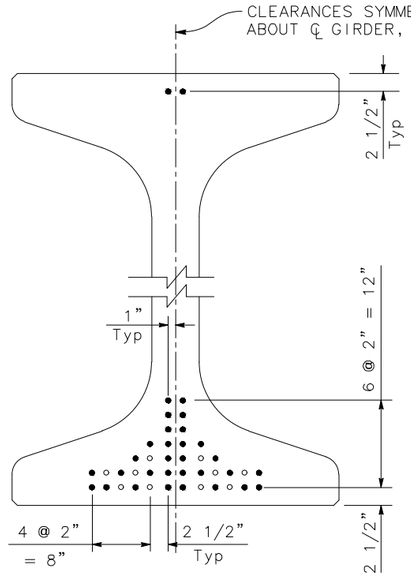

SPAN 1 & 7 (GIRDER A - I)
NO SCALE

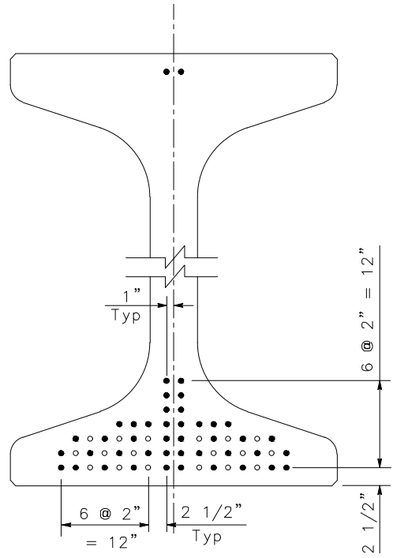

SPAN 2, 3, 5 & 6 (GIRDER A - I)
NO SCALE

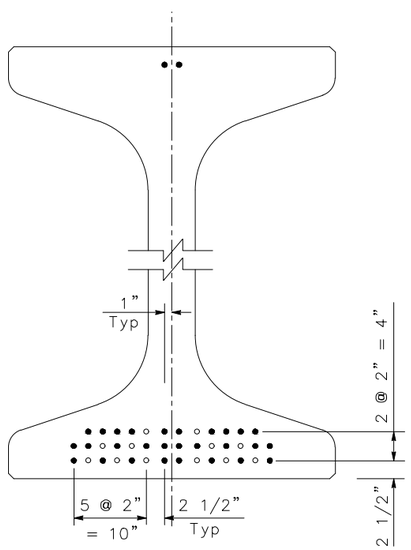

SPAN 4 (GIRDER A - C)
NO SCALE

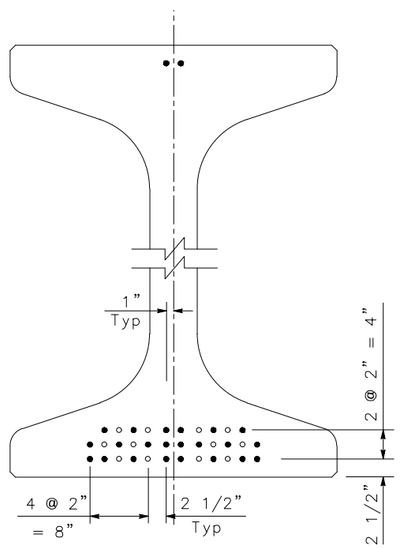

SPAN 4 (GIRDER D - F)
NO SCALE

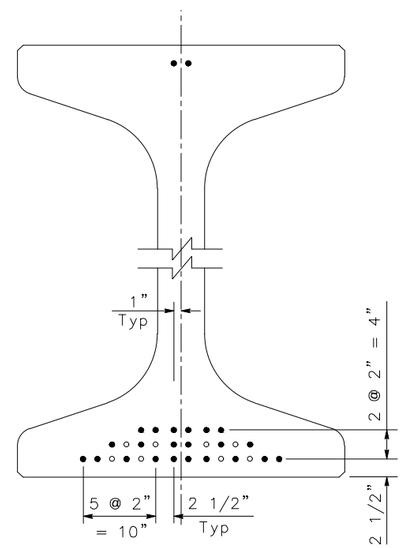

SPAN 4 (GIRDER G - I)
NO SCALE

STRANDS LAYOUT
NO SCALE

LEGEND:
- • Denotes continuously bonded strand location
- ∘ Denotes permissible debonded strand location

NOTE:
THE CONTRACTOR SHALL VERIFY ALL CONTROLLING DIMENSIONS BEFORE ORDERING OR FABRICATING ANY MATERIAL.

PRESTRESSING NOTES

1. The Jacking Force (P) is the jacking force required at the point of control along the span. The jacking force does not include any fabrication specific losses
2. The maximum tensile stress in the prestressing steel upon release shall not exceed 75% of the specified minimum ultimate tensile strength of the prestressing steel
3. The maximum temporary tensile stress (jacking stress) in the prestressing steel shall not exceed 80% of the specified minimum ultimate tensile strength of the prestressing steel
4. Concrete strength:
   f'ci is at time of initial stressing
   f'c is at 28 days
5. Deflection components are informational and will be used to set screed line elevations
6. Screed line elevations for deck concrete will be determined by the Engineer
7. Prestressing strand shall be 270 ksi low relaxation, strand locations may be adjusted as approved by the Engineer
8. No more than 33% of the total number of strands and 50% of the strands per horizontal row may be debonded

NOTES:
1. Dimensions shown are for 0.6" nominal diameter strands.
2. Approval by the Engineer is required for deviation.
3. See "GIRDER LAYOUT" for Girder Location.

SPAN	GIRDER LOCATION	GIRDER LENGTH	GIRDER DEPTH	"X" (in)	JACKING FORCE (P) (kips)	CONCRETE STRENGTH (ksi)		MIDSPAN DEAD LOAD DEFLECTION (in)	
						f'ci	f'c	DECK	RAIL
1	A – I	123'-4"	6'-0"	8.8	1850	5.0	9.0	1.50	0.10
2	A – I	158'-8 3/4"	6'-6"	8	2730	7.0	10.0	2.90	0.20
3	A – I	158'-8 3/4"	6'-6"	8	2730	7.0	10.0	2.90	0.20
4	A	133'-9 3/8"	6'-6"	7.8	1850	5.0	7.0	1.80	0.10
4	B	131'-5"	6'-6"	7.8	1850	5.0	7.0	1.80	0.10
4	C	129'-5/8"	6'-6"	7.8	1850	5.0	7.0	1.70	0.10
4	D	126'-8 1/4"	6'-6"	8.3	1590	5.0	7.0	1.70	0.10
4	E	124'-3 7/8"	6'-6"	8.3	1590	5.0	7.0	1.50	0.10
4	F	121'-11 1/2"	6'-6"	8.3	1590	5.0	7.0	1.40	0.10
4	G	119'-7 1/8"	6'-6"	8.4	1410	5.0	7.0	1.40	0.20
4	H	117'-2 3/4"	6'-6"	8.4	1410	5.0	7.0	1.30	0.20
4	I	114'-10 1/2"	6'-6"	8.4	1410	5.0	7.0	1.30	0.20
5	A – I	158'-6 7/8"	6'-6"	8	2730	7.0	10.0	2.90	0.20
6	A – I	158'-6 7/8"	6'-6"	8	2730	7.0	10.0	2.90	0.20
7	A – I	123'-1"	6'-0"	8.8	1850	5.0	9.0	1.50	0.10

SPAN	GIRDER LOCATION	TOTAL NO. OF 0.6"ø STRANDS	NO. OF DEBONDED STRANDS	DEBONDED LENGTH
1 & 7	A – I	42	10	10', 15', 20'*
2, 3, 5 & 6	A – I	62	18	9',12',15',18',21'*
4	A – C	42	12	10', 15', 20'*
4	D – F	36	10	10', 15', 20'*
4	G – I	32	8	10', 15', 20'*

* Alternate debonded length and mirrored about ℄ girder.

L

REZA ERFANIAN
DESIGN OVERSIGHT

SIGN OFF DATE

	BY	CHECKED
DESIGN	T. PHAM	Y. REN
DETAILS	J. DOTY	T. PHAM
QUANTITIES	C. GUARDADO	A. CLUBB/N. FELDE

PREPARED FOR THE STATE OF CALIFORNIA DEPARTMENT OF TRANSPORTATION

ERIC FREDRICKSON
PROJECT ENGINEER

BRIDGE No. 29-0351
POST MILE 4.89

AUSTIN ROAD OH (REPLACE)
GIRDER DETAILS No. 2

DESIGN DETAIL SHEET (ENGLISH) (REVISION 4/19/2018)

DATE PLOTTED => 1/27/20
FILE => 18-23_Austin_GL.dwg
TIME PLOTTED => 9:17 AM
USERNAME => tpham

ORIGINAL SCALE IN INCHES FOR REDUCED PLANS 0 1 2 3

UNIT:
PROJECT NUMBER & PHASE: 101600 0038
CONTRACT No.: 10-1E7401

DISREGARD PRINTS BEARING EARLIER REVISION DATES

REVISION DATES 7/24/20 12/23/20 07/12/21

SHEET 20 OF 29

Dist	COUNTY	ROUTE	POST MILES TOTAL PROJECT	SHEET No.	TOTAL SHEETS
10	SJ	99/120	4.64/5.72 6.44/T6.76	341	349

REGISTERED CIVIL ENGINEER DATE

PLANS APPROVAL DATE

REGISTERED PROFESSIONAL ENGINEER TRUONG VIET PHAM No. 81809 Exp. 3/31/22 CIVIL STATE OF CALIFORNIA

THE STATE OF CALIFORNIA OR ITS OFFICERS OR AGENTS SHALL NOT BE RESPONSIBLE FOR THE ACCURACY OR COMPLETENESS OF SCANNED COPIES OF THIS PLAN SHEET.

SJCOG
555 E. WEBER AVE
STOCKTON, CA 95202

MARK THOMAS
701 UNIVERSITY AVENUE, SUITE 200
SACRAMENTO, CA 95825

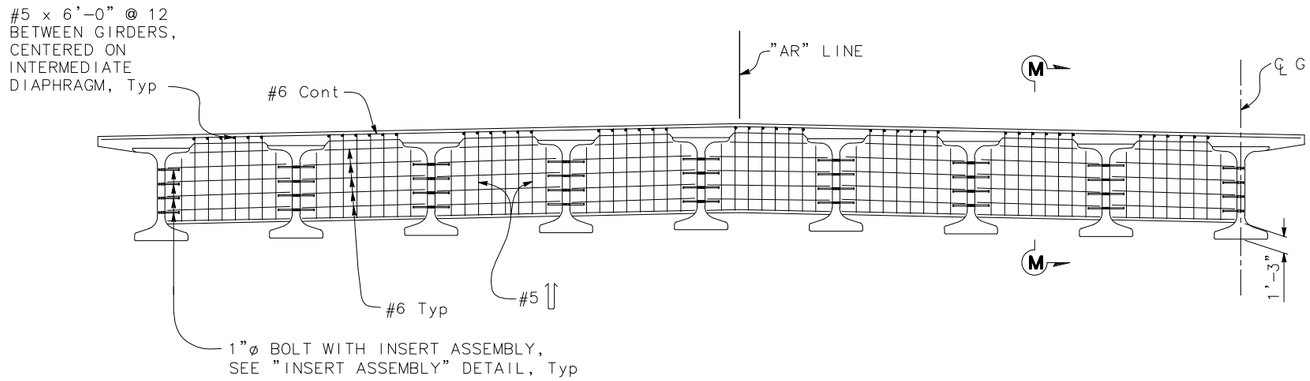

INTERMEDIATE DIAPHRAGM ELEVATION
3/16" = 1'-0"

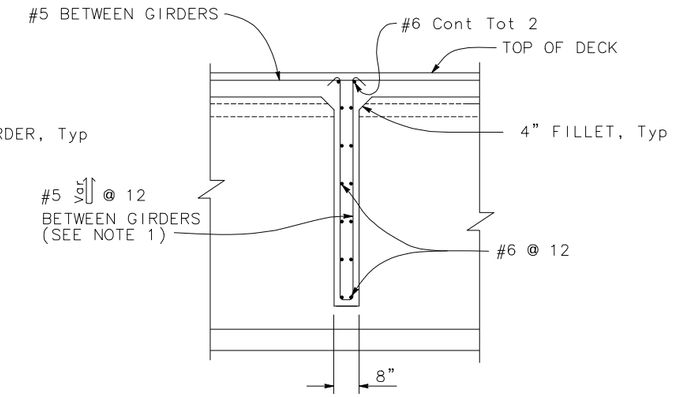

SECTION M-M
1/2" = 1'-0"

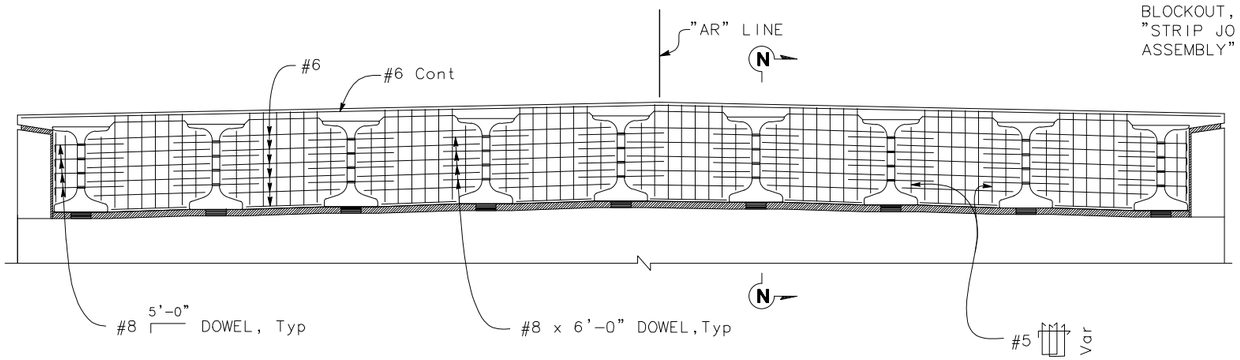

END DIAPHRAGM ELEVATION
3/16" = 1'-0"

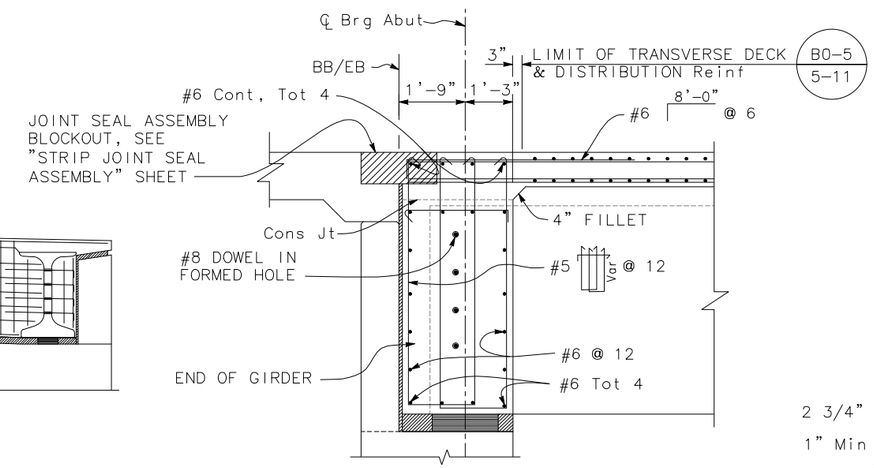

SECTION N-N
1/2" = 1'-0"

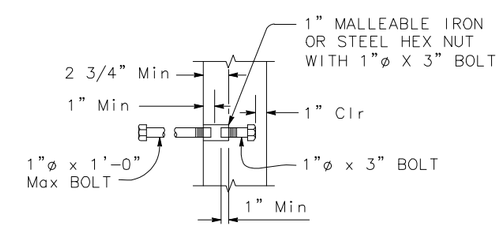

INSERT ASSEMBLY
NO SCALE

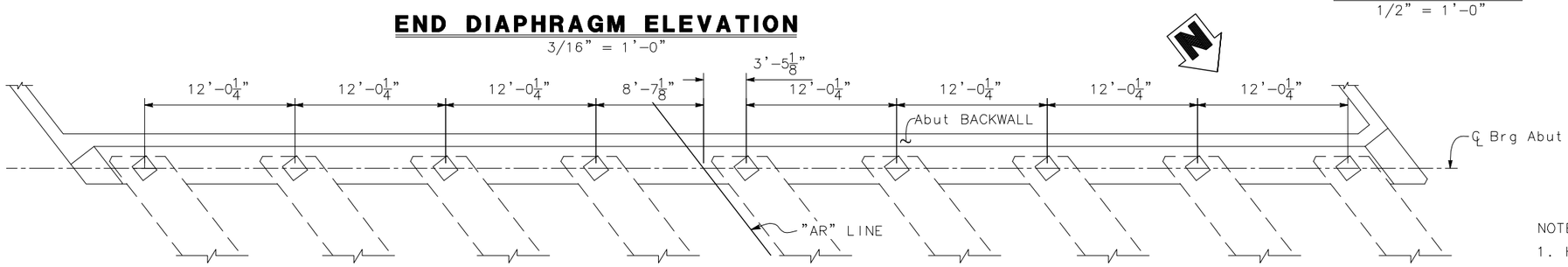

PLAN - END DIAPHRAGM
3/16" = 1'-0"

NOTES:
1. Hook reinforcement inward below girder top flange.
2. Intermediate diaphragm may be vertical or normal to deck grade.
3. Abut 1 shown, Abut 8 similar.

NOTE:
THE CONTRACTOR SHALL VERIFY ALL CONTROLLING DIMENSIONS BEFORE ORDERING OR FABRICATING ANY MATERIAL.

REZA ERFANIAN
DESIGN OVERSIGHT

SIGN OFF DATE

	BY	CHECKED
DESIGN	T. PHAM	Y. REN
DETAILS	J. DOTY	T. PHAM
QUANTITIES	C. GUARDADO	A. CLUBB/N. FELDE

PREPARED FOR THE STATE OF CALIFORNIA DEPARTMENT OF TRANSPORTATION

ERIC FREDRICKSON
PROJECT ENGINEER

BRIDGE No. 29-0351
POST MILE 4.89

AUSTIN ROAD OH (REPLACE)
GIRDER DETAILS No. 3

DESIGN DETAIL SHEET (ENGLISH) (REVISION 4/19/2018)

DATE PLOTTED => 1/27/20
FILE => 18-23_Austin_GL.dwg
TIME PLOTTED => 9:17 AM
USERNAME => tpham
ORIGINAL SCALE IN INCHES FOR REDUCED PLANS 0 1 2 3

UNIT:
PROJECT NUMBER & PHASE: 101600 0038
CONTRACT No.: 10-1E7401

DISREGARD PRINTS BEARING EARLIER REVISION DATES
REVISION DATES 7/24/20 12/23/20 07/12/21

SHEET 21 OF 29

Dist	COUNTY	ROUTE	POST MILES TOTAL PROJECT	SHEET No.	TOTAL SHEETS
10	SJ	99/120	4.64/5.72 6.44/T6.76	342	349

REGISTERED CIVIL ENGINEER DATE

PLANS APPROVAL DATE

REGISTERED PROFESSIONAL ENGINEER
TRUONG VIET PHAM
No. 81809
Exp. 3/31/22
CIVIL
STATE OF CALIFORNIA

THE STATE OF CALIFORNIA OR ITS OFFICERS OR AGENTS SHALL NOT BE RESPONSIBLE FOR THE ACCURACY OR COMPLETENESS OF SCANNED COPIES OF THIS PLAN SHEET.

SJCOG
555 E. WEBER AVE
STOCKTON, CA 95202

MARK THOMAS
701 UNIVERSITY AVENUE, SUITE 200
SACRAMENTO, CA 95825

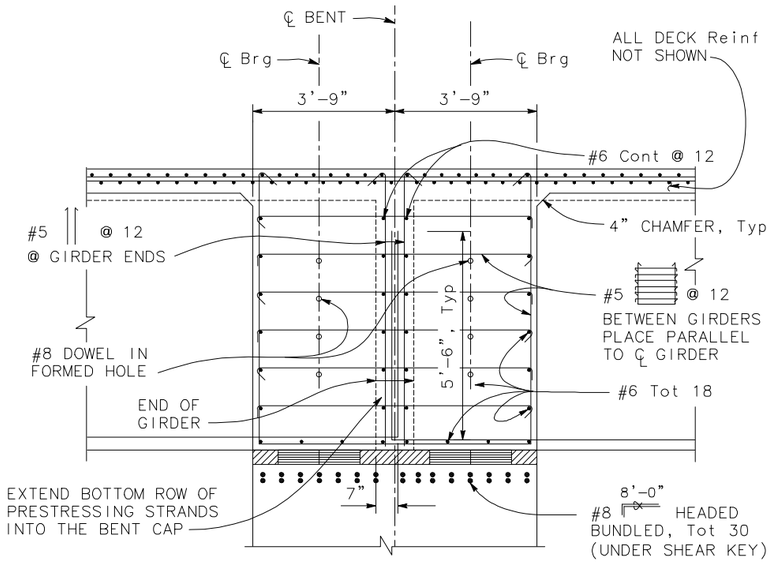

SECTION O-O (BENT 3, 4, 5 & 6)

1/2" = 1'-0"

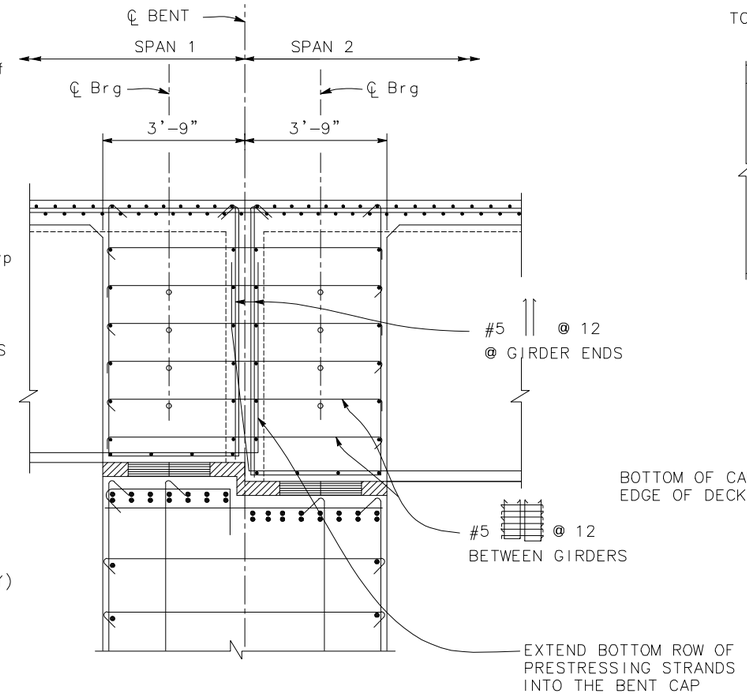

SECTION O-O (BENT 2)

1/2" = 1'-0"

Notes:
1. For details not shown, SEE "SECTION O-O (BENT 3, 4, 5 & 6)" details
2. Bent 2 detail shown, Bent 7 mirrored.

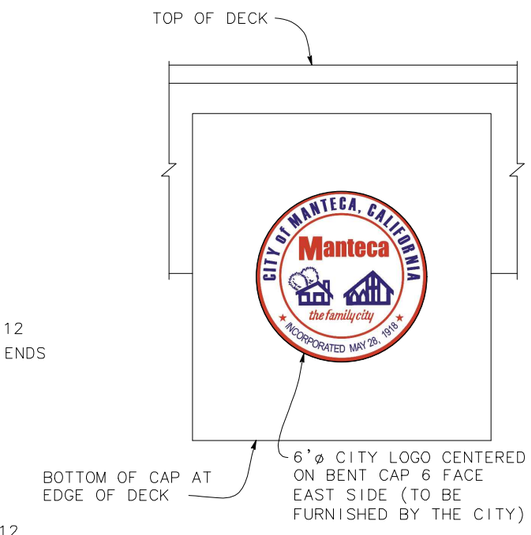

BENT 6 CITY LOGO DETAIL

3/8" = 1'-0"

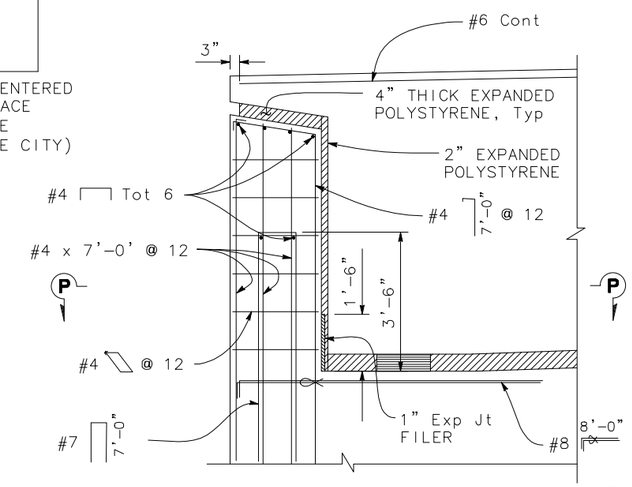

SHEAR KEY ELEVATION (BENT)

B0-13

1/2" = 1'-0"

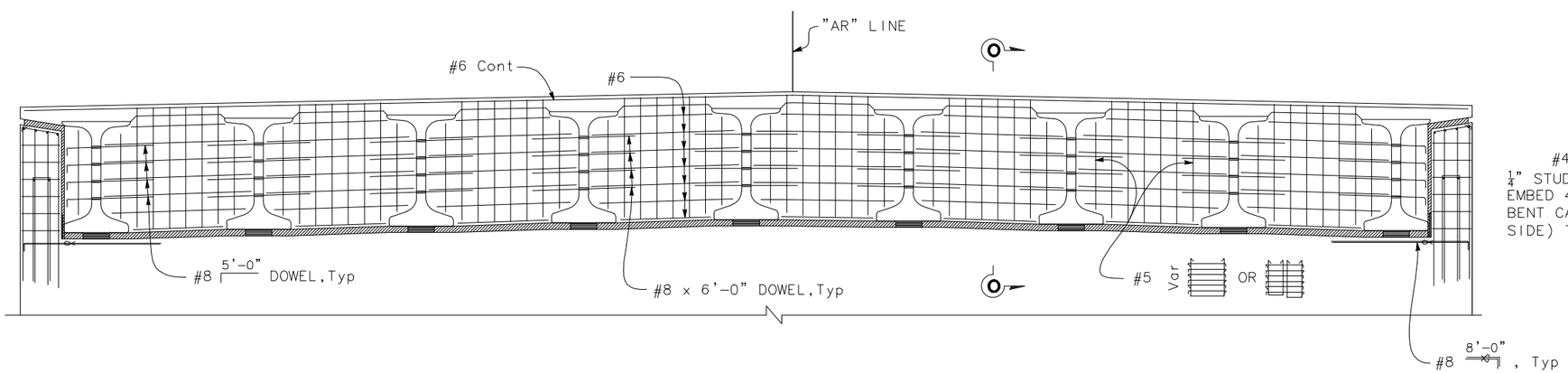

BENT ELEVATION

1/4" = 1'-0"

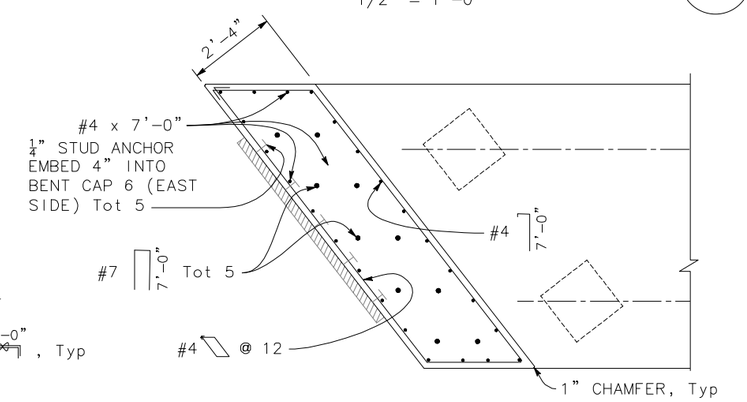

SECTION P-P

1/2" = 1'-0"

NOTE:
THE CONTRACTOR SHALL VERIFY ALL CONTROLLING DIMENSIONS BEFORE ORDERING OR FABRICATING ANY MATERIAL.

REZA ERFANIAN
DESIGN OVERSIGHT

SIGN OFF DATE

	BY	CHECKED
DESIGN	T. PHAM	Y. REN
DETAILS	J. DOTY	T. PHAM
QUANTITIES	C. GUARDADO	A. CLUBB/N. FELDE

PREPARED FOR THE STATE OF CALIFORNIA DEPARTMENT OF TRANSPORTATION

ERIC FREDRICKSON
PROJECT ENGINEER

BRIDGE No. 29-0351
POST MILE 4.89

AUSTIN ROAD OH (REPLACE)

GIRDER DETAILS No. 4

DESIGN DETAIL SHEET (ENGLISH) (REVISION 4/19/2018)

DATE PLOTTED =>1/27/20
FILE =>18-23_Austin_GL.dwg

TIME PLOTTED =>9:17 AM
USERNAME => tpham

ORIGINAL SCALE IN INCHES FOR REDUCED PLANS 0 1 2 3

UNIT:
PROJECT NUMBER & PHASE: 101600 0038

CONTRACT No.: 10-1E7401

DISREGARD PRINTS BEARING EARLIER REVISION DATES

REVISION DATES 7/24/20 12/23/20 07/12/21

SHEET 22 OF 29

Dist	COUNTY	ROUTE	POST MILES TOTAL PROJECT	SHEET No.	TOTAL SHEETS
10	SJ	99/120	4.64/5.72 6.44/T6.76	343	349

REGISTERED CIVIL ENGINEER DATE

PLANS APPROVAL DATE

REGISTERED PROFESSIONAL ENGINEER TRUONG VIET PHAM No. 81809 Exp. 3/31/22 CIVIL STATE OF CALIFORNIA

THE STATE OF CALIFORNIA OR ITS OFFICERS OR AGENTS SHALL NOT BE RESPONSIBLE FOR THE ACCURACY OR COMPLETENESS OF SCANNED COPIES OF THIS PLAN SHEET.

SJCOG
555 E. WEBER AVE
STOCKTON, CA 95202

MARK THOMAS
701 UNIVERSITY AVENUE, SUITE 200
SACRAMENTO, CA 95825

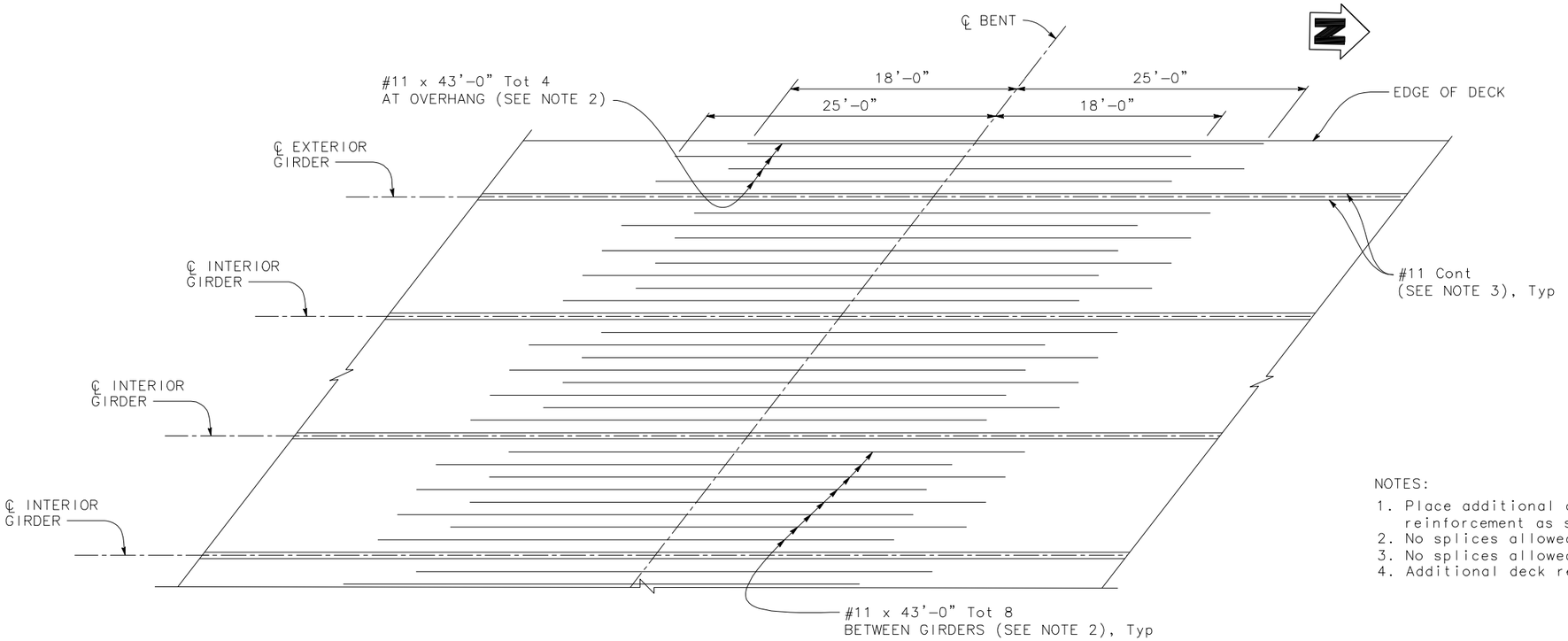

ADDITIONAL DECK REINFORCEMENT

3/16" = 1'-0"

NOTES:

1. Place additional deck reinforcement between longitudinal deck reinforcement as shown on "TYPICAL SECTION" sheet.
2. No splices allowed for #11 bars.
3. No splices allowed 25'-0" each side of ℄ bent for #11 Cont bars.
4. Additional deck reinforcement at Bent 2 shown, Bents 3 to 7 similar.

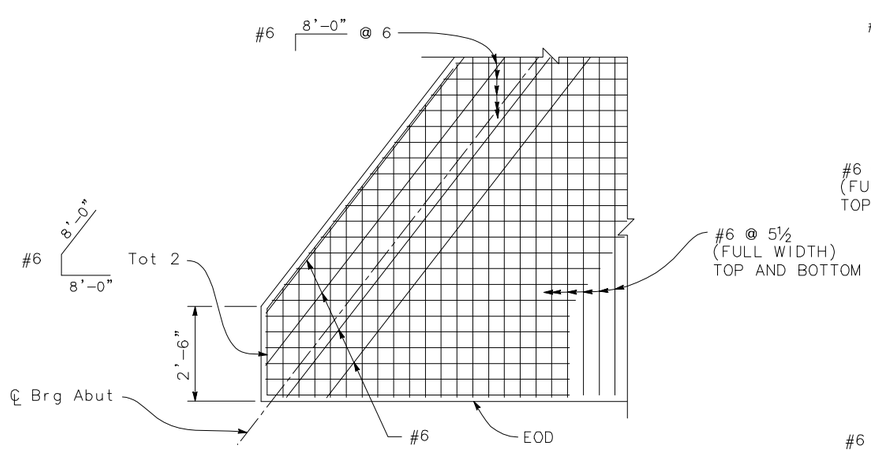

ACUTE CORNER

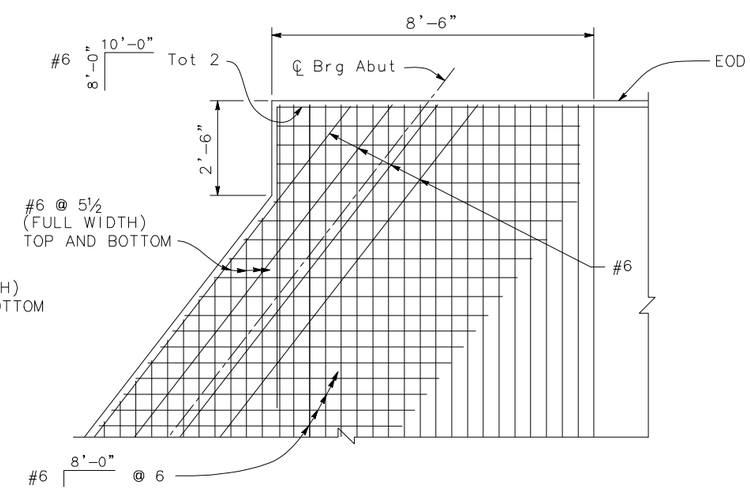

OBTUSE CORNER

DECK REINFORCMENT AT CORNERS

1/2" = 1'-0"

NOTE:
THE CONTRACTOR SHALL VERIFY ALL CONTROLLING DIMENSIONS BEFORE ORDERING OR FABRICATING ANY MATERIAL.

REZA ERFANIAN
DESIGN OVERSIGHT

SIGN OFF DATE

	BY	CHECKED
DESIGN	T. PHAM	Y. REN
DETAILS	J. DOTY	T. PHAM
QUANTITIES	C. GUARDADO	A. CLUBB/N. FELDE

PREPARED FOR THE STATE OF CALIFORNIA DEPARTMENT OF TRANSPORTATION

ERIC FREDRICKSON
PROJECT ENGINEER

BRIDGE No. 29-0351
POST MILE 4.89

AUSTIN ROAD OH (REPLACE)

GIRDER DETAILS No. 5

DESIGN DETAIL SHEET (ENGLISH) (REVISION 4/19/2018)

DATE PLOTTED =>1/27/20
FILE =>18-23_Austin_GL.dwg

TIME PLOTTED =>9:17 AM
USERNAME => tpham

ORIGINAL SCALE IN INCHES FOR REDUCED PLANS 0 1 2 3

UNIT:
PROJECT NUMBER & PHASE: 101600 0038

CONTRACT No.: 10-1E7401

DISREGARD PRINTS BEARING EARLIER REVISION DATES

REVISION DATES 7/24/20 12/23/20 07/12/21

SHEET 23 OF 29

DIST	COUNTY	ROUTE	POST MILES TOTAL PROJECT	SHEET No.	TOTAL SHEETS
10	SJ	99/120	4.64/5.72 6.44/T6.76	344	349

REGISTERED CIVIL ENGINEER DATE

PLANS APPROVAL DATE

REGISTERED PROFESSIONAL ENGINEER — TRUONG VIET PHAM — No. 81809 — Exp. 3/31/22 — CIVIL — STATE OF CALIFORNIA

The State of California or its officers or agents shall not be responsible for the accuracy or completeness of scanned copies of this plan sheet.

The Registered Civil Engineer for the project is responsible for the selection and proper application of the component design and any modifications shown.

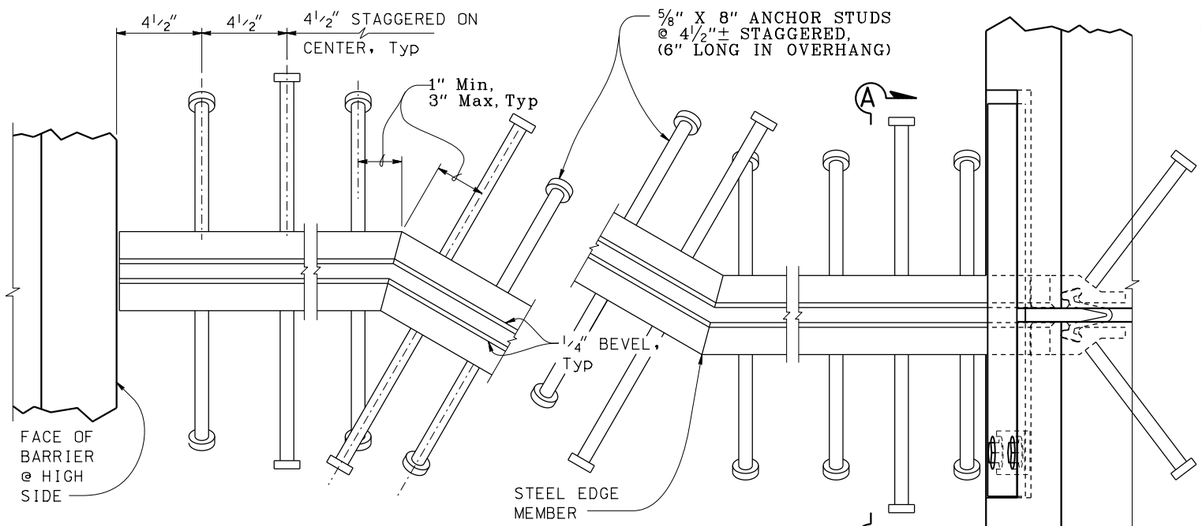

SKEW ℄ 20°

PLAN

3" = 1'-0"

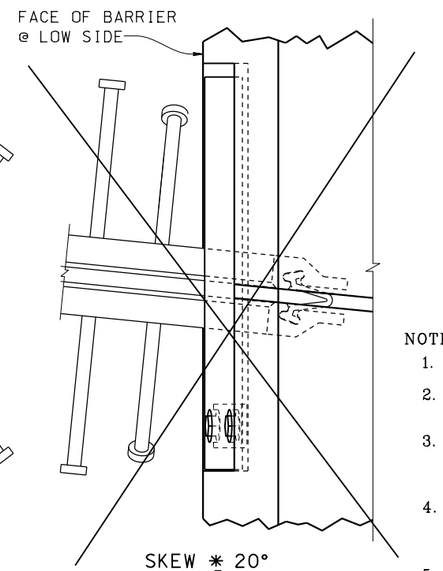

SKEW ≠ 20°

PLAN

3" = 1'-0"

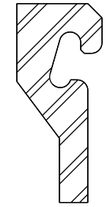

SCHEMATIC STEEL EDGE MEMBER

NO SCALE

NOTES:

1. Alternatively, fillet or complete penetration welds may be used at anchor studs.
2. Alternate types of anchor studs may be permitted subject to the authorization by the Engineer.
3. Joint seal assembly to be used in conjunction with closure pour. (See other sheets for limits). Closure pour shall not be placed until final deck surface is within the tolerances specified.
4. Use joint at crown of roadway, at any change in transverse slope in deck and at changes in horizontal direction. Place other joints at or near lanes. All metal parts to be painted or galvanized after fabrication.
5. Sheet Neoprene shall be fabricated in one continuous piece and shall be fabricated to bend around corners. Field splices of the neoprene are not allowed.
6. Insert assembly or expansion anchorage for 5/8" x 1 3/4" bolts. Use installation bolts extended 1/2" minimum past nut and coat with bond breaker, after concrete has cured, remove installation bolts, install HS bolts and sheet neoprene.
7. Use sidewalk detail at all sidewalk joints. Use barrier detail low side at both sides if the roadway is crowned, or if the difference in elevation between the ends of the seal is 6 inches or less.
8. a_c, a_s are the thermal expansion coefficients for concrete and steel respectively.
9. Anchor studs shall conform to ASTM A108.

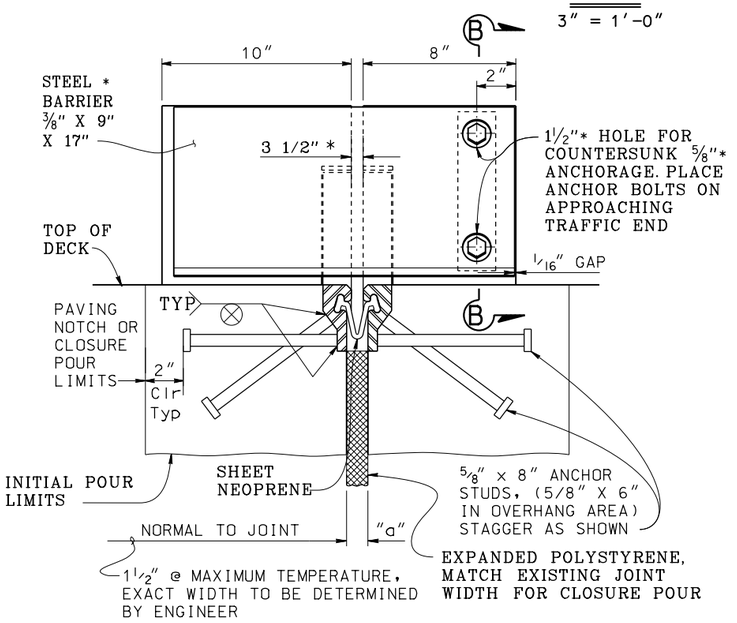

SECTION A-A

3" = 1'-0"

JOINT INFORMATION			"a" DIMENSIONS		
LOCATION	MOVEMENT RANGE (MR)	SKEW	WINTER	SPRING & FALL	SUMMER
Abut 1	3 1/2"	37.79°	3"	2 1/4"	1 1/2"
Abut 8	3 1/2"	45.69°	3"	2 1/4"	1 1/2"

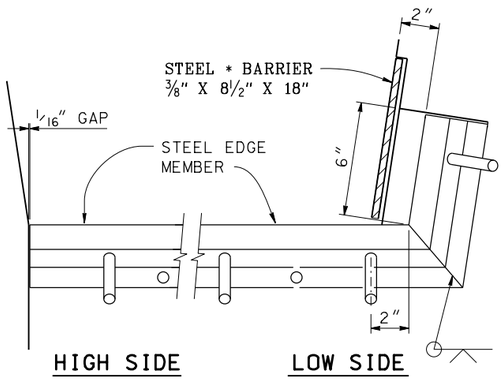

BARRIER DETAIL

3" = 1'-0"

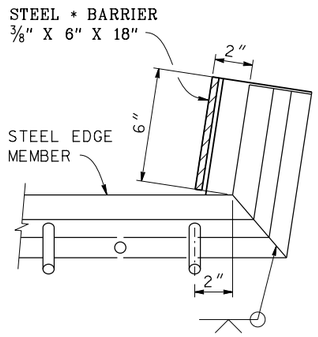

SIDEWALK DETAIL

3" = 1'-0"

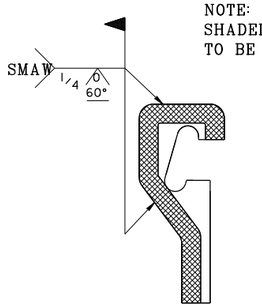

NOTE: SHADED AREAS TO BE WELDED

SCHEMATIC FIELD WELD DETAIL

NO SCALE

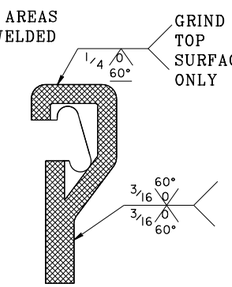

SCHEMATIC SHOP WELD DETAIL

NO SCALE

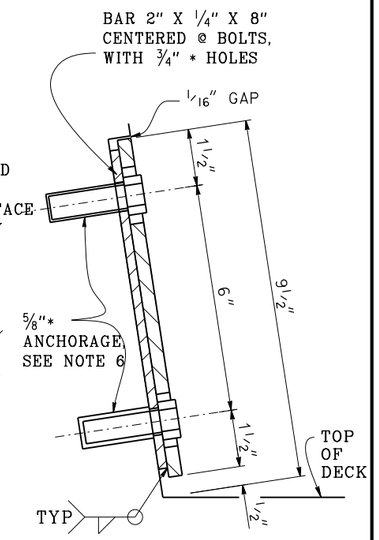

SECTION B-B

6" = 1'-0"

* TO SET MINIMUM JOINT OPENING "W"

"W" $1\frac{1}{2}" + [(\text{Max Str temperature in °F}) - (\text{actual Str temperature in °F})] * (a_c \text{ or } a_s)(12)(\text{contributory L in feet})$

1 1/2" Minimum

a_c = 0.0000060

a_s = 0.0000065

SPECIAL DETAILS

AUSTIN ROAD OH (REPLACE)

STRIP JOINT SEAL ASSEMBLY

MAXIMUM MOVEMENT RANGE = 4"

BRIDGE STANDARD DETAILS

xs8-010	July 2020	The components of the Bridge Standard Details have been prepared under the responsible charge of the Technical Owner, a registered civil engineer in the State of California
FILE NO.	APPROVAL DATE	

STATE OF CALIFORNIA DEPARTMENT OF TRANSPORTATION

DIVISION OF ENGINEERING SERVICES

BRIDGE NO. 29-0351

POST MILE 4.89

Refer to: http://www.dot.ca.gov/hq/esc/techpubs/manual/bridgemanuals/bridge-standard-detail-sheets/index.html

FILE = ℄ 22 202007-xs8-010.dgn

USERNAME = ℄ tpham TIME PLOTTED = ℄ 09:31 DATE PLOTTED = ℄ 18-AUG-2021

ORIGINAL SCALE IN INCHES FOR REDUCED PLANS 0 1 2 3

UNIT:

PROJECT NUMBER & PHASE: 1016000038

CONTRACT NO.: 10-1E7401

DISREGARD PRINTS BEARING EARLIER REVISION DATES

REVISION DATES: 6-23-14 6-18-20 7-14-20

SHEET 24 OF 29

DIST	COUNTY	ROUTE	POST MILES TOTAL PROJECT	SHEET No.	TOTAL SHEETS
10	SJ	99/120	4.64/5.72 6.44/T6.76	345	349

REGISTERED CIVIL ENGINEER DATE

PLANS APPROVAL DATE

REGISTERED PROFESSIONAL ENGINEER TRUONG VIET PHAM No. 81809 Exp. 3/31/22 CIVIL STATE OF CALIFORNIA

The State of California or its officers or agents shall not be responsible for the accuracy or completeness of scanned copies of this plan sheet.

The Registered Civil Engineer for the project is responsible for the selection and proper application of the component design and any modifications shown.

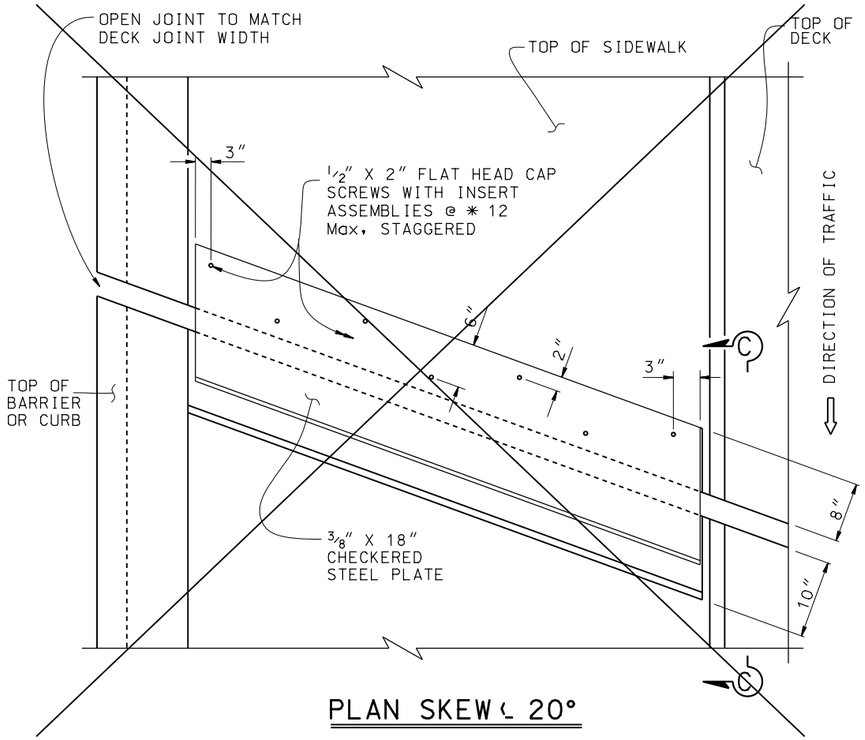

PLAN SKEW ∠ 20°

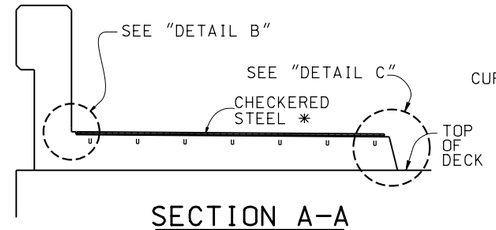

SECTION A-A

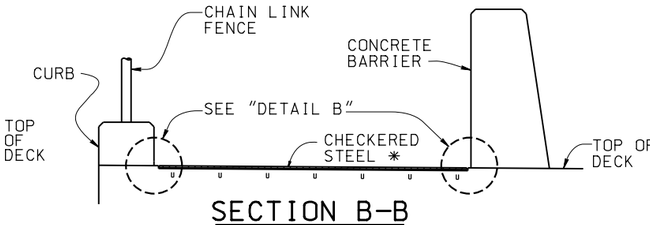

SECTION B-B

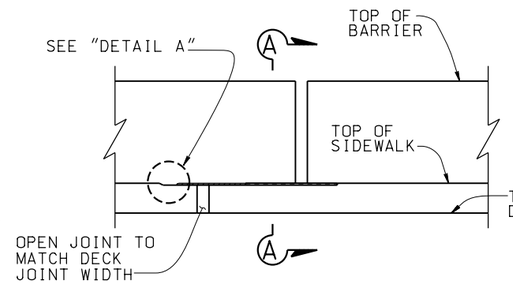

ELEVATION

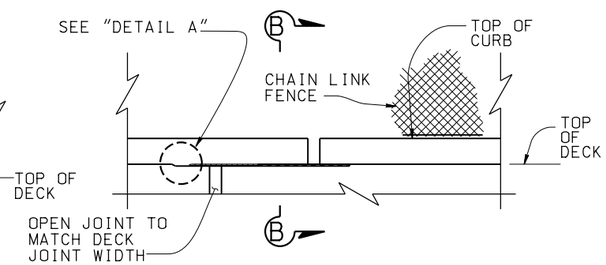

ELEVATION

NOTE: Barrier not shown for clarity

NOTES:

1. Utility openings and expansion joints not shown for clarity
2. Recess concrete 1/2" for plates
3. Plates to be galvanized
4. Architectural treatment not shown
5. Insert assembly or expansion anchorage for 5/8" x 1 3/4" bolts. Use installation bolts extended 1/2" minimum past nut and coat with bond breaker. After concrete has cured, remove installation bolts, install HS bolts

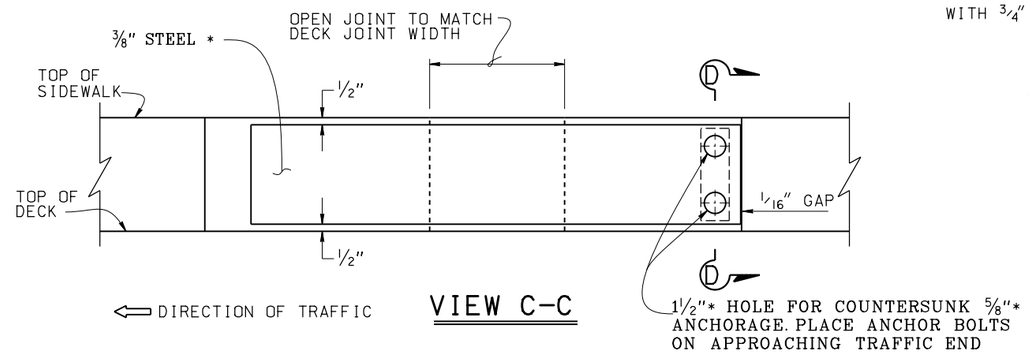

VIEW C-C

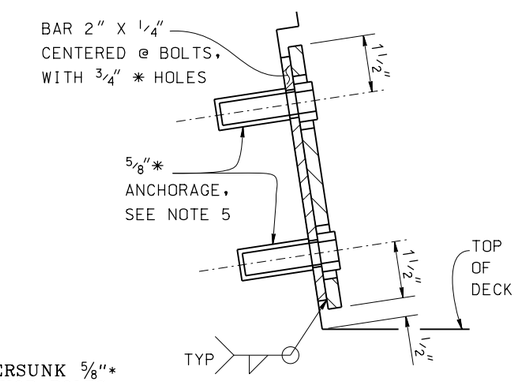

SECTION D-D

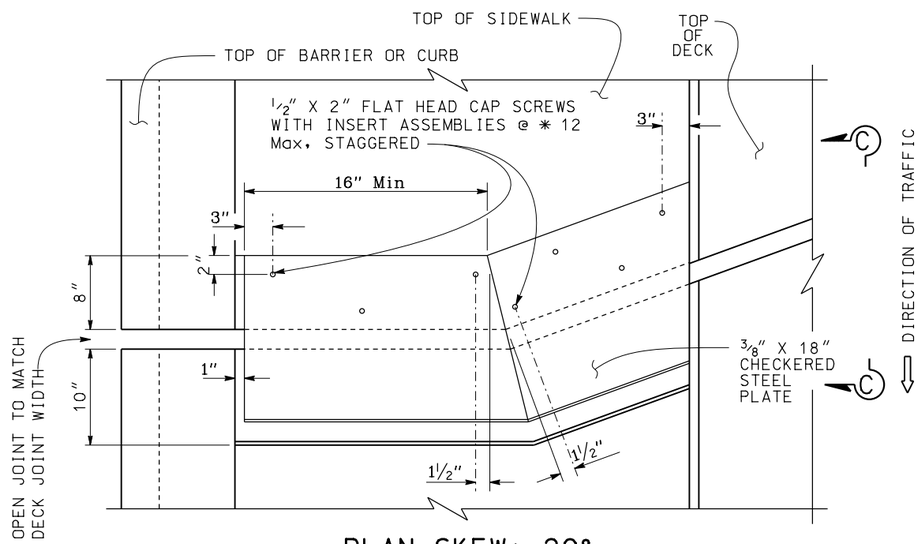

PLAN SKEW › 20°

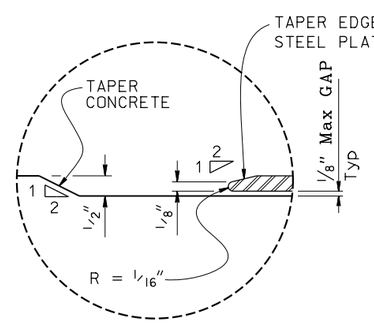

DETAIL A

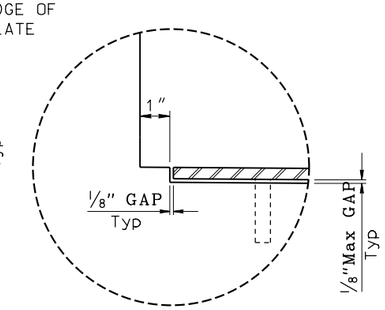

DETAIL B

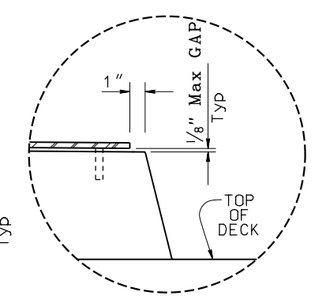

DETAIL C

NO SCALE

SPECIAL DETAILS

BRIDGE STANDARD DETAILS		
xs8-050	October 2018	*The components of the Bridge Standard Details have been prepared under the responsible charge of the Technical Owner, a registered civil engineer in the State of California*
FILE NO.	APPROVAL DATE	

Refer to: http://www.dot.ca.gov/hq/esc/techpubs/manual/bridgemanuals/bridge-standard-detail-sheets/index.html

FILE = ¢ 23 201810-xs8-050.dgn
USERNAME = ¢ tpham *TIME PLOTTED = ¢ 09:31* *DATE PLOTTED = ¢ 18-AUG-2021*

ORIGINAL SCALE IN INCHES FOR REDUCED PLANS 0 1 2 3

STATE OF CALIFORNIA DEPARTMENT OF TRANSPORTATION

DIVISION OF ENGINEERING SERVICES

BRIDGE NO. 29-0351
POST MILE 4.89

AUSTIN ROAD OH (REPLACE)
JOINT ARMOR FOR PEDESTRIAN WALKWAYS

UNIT:
PROJECT NUMBER & PHASE: 1016000038 CONTRACT NO.: 10-1E7401

DISREGARD PRINTS BEARING EARLIER REVISION DATES

REVISION DATES 7-24-14 9-11-18 10-2-18 8-23-19

SHEET 25 OF 29

DIST	COUNTY	ROUTE	POST MILES TOTAL PROJECT	SHEET No	TOTAL SHEETS
10	SJ	99/120	4.64/5.72 R6.44/T6.76	346	349

REGISTERED GEOTECHNICAL ENGINEER 8/18/21 DATE

PLANS APPROVAL DATE

REGISTERED PROFESSIONAL ENGINEER DAVID J. MORRELL No. GE 2843 GEOTECHNICAL STATE OF CALIFORNIA

The State of California or its officers or agents shall not be responsible for the accuracy or completeness of scanned copies of this plan sheet.

BLACKBURN CONSULTING
2491 BOATMAN AVENUE
WEST SACRAMENTO, CA 95691 FILE No. 3471.x

SAN JOAQUIN COUNTY COUNCIL OF GOVERNMENTS
555 E. WEBER AVENUE
STOCKTON, CA 95202

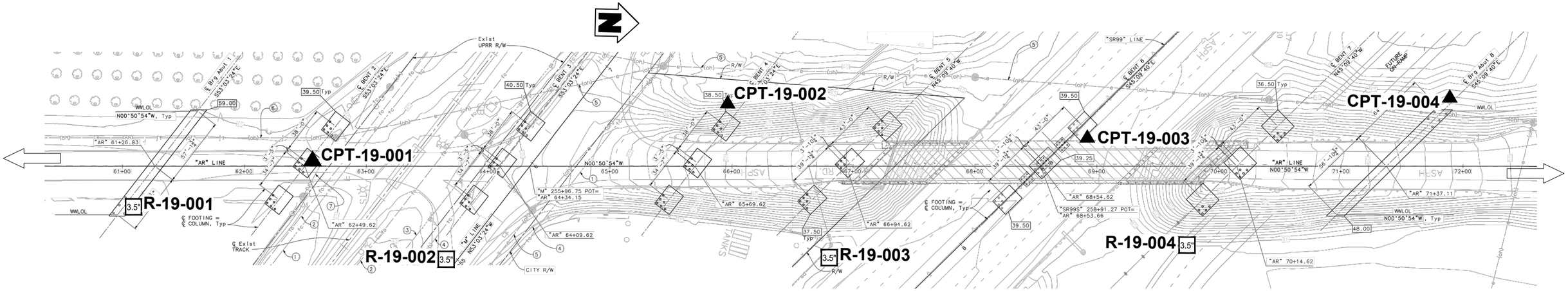

PLAN
1" = 80'

BENCHMARK:

Elevation shown are NGVD 29, based on the State of California Department of Transportation control Data Sheet (U.S. Survey Units). The following points were held for the vertical adjustment.
1. 4855 (SJ-99-M6L-525)
2. 4876 (SJ-99-M6L-549)

LEGEND:

- Indicates Bottom of Footing Elevation (feet
- Indicates Pipe Pile (not all piles shown)
- Indicates Bridge Removal
- Indicates Existing Bridge

NOTES:

1. This LOTB sheet was prepared in accordance with the Caltrans Soil & Rock Logging, Classification, and Presentation Manual (2010).
2. Legends sheets are not included in plan set. See Caltrans Standard Plans, 2018 Edition, sheets A10F, A10G (soil legends), and A10H (rock legend).
3. Standard Penetration tests were performed in accordance with ASTM D 1586 using a automated drop system. Drill rods were 1 5/8-inch diameter "A"-rods; samplers was driven with brass and/or stainless steel liners.
4. "2.4 inch sampler": ID=2.4 inch, OD=2.9 inch. Driven in same manner as SPT ("1.4 inch") sampler.
5. Where indicated by an asterisk (*) the number of blows shown is for only that fraction of the initial 0.5 ft. "seating drive" interval penetrated.
6. The length of each sampled interval is shown graphically on the boring log.
7. Consistency of soils shown in ( ) where estimated.
8. Groundwater surface (GWS) reflect the fluid level in the borings or estimated ground water level in the Cone Penetration tests on the specified date.
9. Groundwater surface is subject to seasonal fluctuations and may occur at higher or lower elevations depending on the conditions at any particular time.
10. Groundwater was encountered in Borings R-19-002, R-19-003, R-19-004, CPT-19-001, CPT-19-002, and CPT-19-004 but elevations were not measured.
11. Electronic media for plan view provided by Mark Thomas, 90% Submittal Plan Set, Foundation Plans, revision dated December 23, 2020.
12. Boring elevations are approximate and based on "60% Submittal" plans, dated February 5, 2019.
13. The "Log of Test Borings" drawing is included with plans in accordance with Section 2-1.03 of Caltrans "Standard Specifications", 2018 Edition.

ENGINEERING SERVICES		GEOTECHNICAL SERVICES
FUNCTIONAL SUPERVISOR	DRAWN BY: Michael Robertson	FIELD INVESTIGATION BY: Daniel Contreras / Sergio Tostado
	CHECKED BY: David Morrell	

PREPARED FOR THE STATE OF CALIFORNIA DEPARTMENT OF PUBLIC WORKS

E. FREDRICKSON
PROJECT ENGINEER

BRIDGE NO. 29-0351
POST MILE

AUSTIN ROAD OH (REPLACE)
LOG OF TEST BORINGS (1 OF 4)

GS CIVIL LOG OF TEST BORINGS SHEET (ENGLISH) (REV. 7/16/10)

ORIGINAL SCALE IN INCHES FOR REDUCED PLANS 0 1 2 3

UNIT: 0000
PROJECT NUMBER & PHASE: 1016000038 CONTRACT NO.: 10-1E7401

DISREGARD PRINTS BEARING EARLIER REVISION DATES 07/28/20 12/15/20

REVISION DATES		SHEET	OF
		26	29

FILE => $REQUEST

8/19/2021 3471.x Austin Road Overcrossing LOTB.dwg

USERNAME => $USER DATE PLOTTED => $DATE TIME PLOTTED => $TIME

DIST	COUNTY	ROUTE	POST MILES TOTAL PROJECT	SHEET No	TOTAL SHEETS
10	SJ	99/120	4.64/5.72 R6.44/T6.76	347	349

REGISTERED GEOTECHNICAL ENGINEER 8/18/21 DATE

PLANS APPROVAL DATE

REGISTERED PROFESSIONAL ENGINEER DAVID J. MORRELL No. GE 2843 GEOTECHNICAL STATE OF CALIFORNIA

The State of California or its officers or agents shall not be responsible for the accuracy or completeness of scanned copies of this plan sheet.

BLACKBURN CONSULTING
2491 BOATMAN AVENUE
WEST SACRAMENTO, CA 95691 FILE No. 3471.x

SAN JOAQUIN COUNTY COUNCIL OF GOVERNMENTS
555 E. WEBER AVENUE
STOCKTON, CA 95202

FOR PLAN VIEW AND BORING NOTES SEE LOG OF TEST BORINGS (1 OF 3)

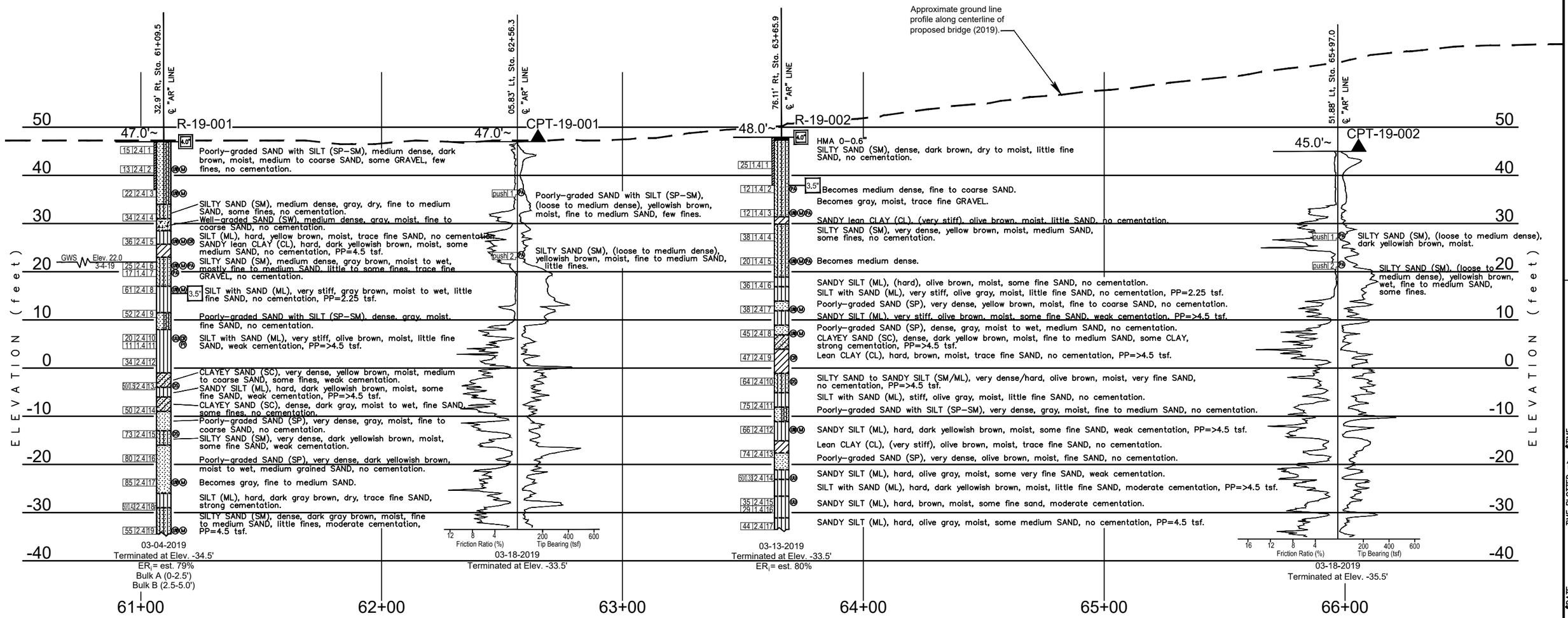

PROFILE
HOR. 1"=20'
VERT. 1"=10'

ENGINEERING SERVICES	GEOTECHNICAL SERVICES	PREPARED FOR THE STATE OF CALIFORNIA DEPARTMENT OF PUBLIC WORKS		BRIDGE NO. 29-0351 POST MILE	AUSTIN ROAD OH (REPLACE)
FUNCTIONAL SUPERVISOR	DRAWN BY: Michael Robertson		E. FREDRICKSON PROJECT ENGINEER		LOG OF TEST BORINGS (2 OF 4)
	CHECKED BY: David Morrell	FIELD INVESTIGATION BY: Daniel Contreras / Sergio Tostado			

GS CIVIL LOG OF TEST BORINGS SHEET (ENGLISH) (REV. 7/16/10)

ORIGINAL SCALE IN INCHES FOR REDUCED PLANS 0 1 2 3

UNIT: 0000
PROJECT NUMBER & PHASE: 1016000038 CONTRACT NO.: 10-1E7401

DISREGARD PRINTS BEARING EARLIER REVISION DATES 07/28/20 12/15/20

REVISION DATES	SHEET	OF
	27	29

FILE => $REQUEST

8/19/2021 3471.x Austin Road Overcrossing LOTB.dwg

USERNAME => $USER DATE PLOTTED => $DATE TIME PLOTTED => $TIME

DIST	COUNTY	ROUTE	POST MILES TOTAL PROJECT	SHEET No	TOTAL SHEETS
10	SJ	99/120	4.64/5.72 R6.44/T6.76	348	349

REGISTERED GEOTECHNICAL ENGINEER 8/18/21 DATE

PLANS APPROVAL DATE

REGISTERED PROFESSIONAL ENGINEER DAVID J. MORRELL No. GE 2843 GEOTECHNICAL STATE OF CALIFORNIA

The State of California or its officers or agents shall not be responsible for the accuracy or completeness of scanned copies of this plan sheet.

BLACKBURN CONSULTING
2491 BOATMAN AVENUE
WEST SACRAMENTO, CA 95691 FILE No. 3471.x

SAN JOAQUIN COUNTY COUNCIL OF GOVERNMENTS
555 E. WEBER AVENUE
STOCKTON, CA 95202

FOR PLAN VIEW AND BORING NOTES SEE LOG OF TEST BORINGS (1 OF 3)

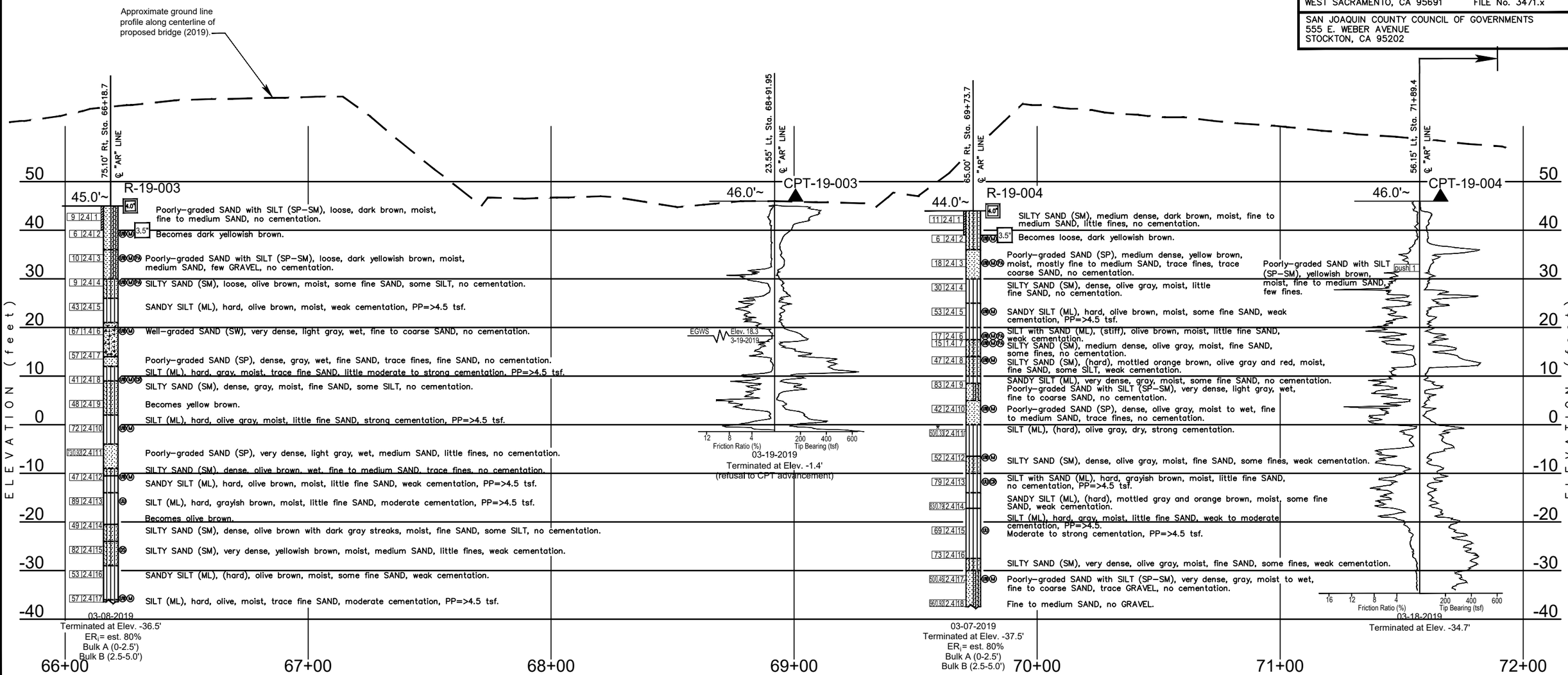

PROFILE
HOR. 1"=20'
VERT. 1"=10'

ENGINEERING SERVICES	GEOTECHNICAL SERVICES	PREPARED FOR THE STATE OF CALIFORNIA DEPARTMENT OF PUBLIC WORKS		BRIDGE NO.	AUSTIN ROAD OH (REPLACE)
FUNCTIONAL SUPERVISOR	DRAWN BY: Michael Robertson		E. FREDRICKSON	29-0351	LOG OF TEST BORINGS (3 OF 4)
	CHECKED BY: David Morrell	FIELD INVESTIGATION BY: Daniel Contreras / Sergio Tostado	PROJECT ENGINEER	POST MILE	

GS CIVIL LOG OF TEST BORINGS SHEET (ENGLISH) (REV. 7/16/10)

ORIGINAL SCALE IN INCHES FOR REDUCED PLANS 0 1 2 3

UNIT: 0000
PROJECT NUMBER & PHASE: 1016000038 CONTRACT NO.: 10-1E7401

DISREGARD PRINTS BEARING EARLIER REVISION DATES

REVISION DATES: 07/28/20 12/15/20 | SHEET 28 | OF 29

FILE => $REQUEST

8/19/2021 3471.x Austin Road Overcrossing LOTB.dwg

USERNAME => $USER DATE PLOTTED => $DATE TIME PLOTTED => $TIME

I-139 (4)

FED. ROAD DIST. NO.	STATE	PROJ. NO.	FISCAL YEAR	SHEET NO.	TOTAL SHEETS
2	CAL.			48	54

DIST.	COUNTY	ROUTE	SECTION	SHEET NO.	TOTAL SHEETS
X	SJ		A		

Stewart Mitchell
BRIDGE ENGINEER — CIVIL ENGINEER - CLERK OF THE BOARD
APPROVED May 18, 1953

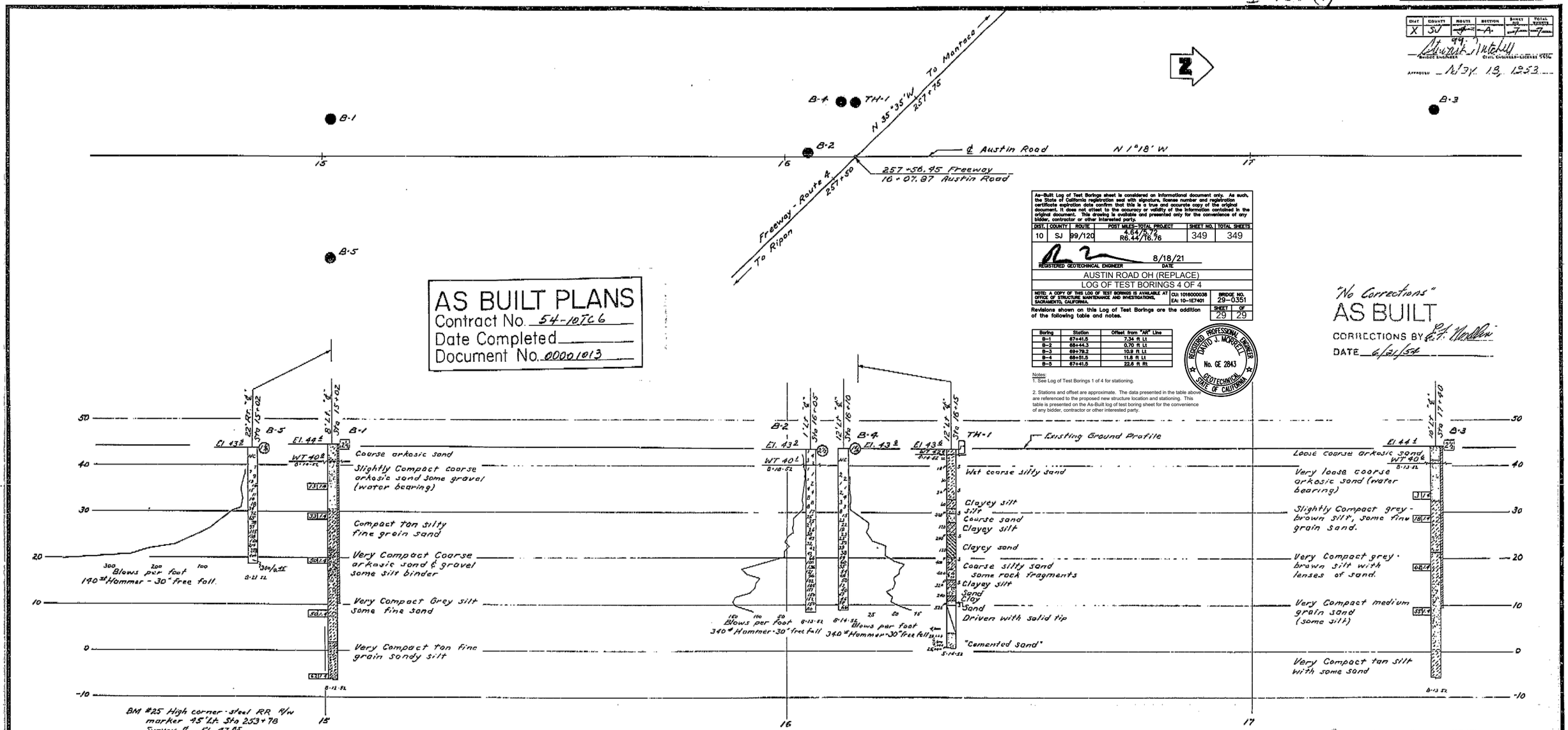

AS BUILT PLANS
Contract No. 54-10TC6
Date Completed
Document No. 00001013

As-Built Log of Test Borings sheet is considered an informational document only. As such, the State of California registration seal with signature, license number and registration certificate expiration date confirm that this is a true and accurate copy of the original document. It does not attest to the accuracy or validity of the information contained in the original document. This drawing is available and presented only for the convenience of any bidder, contractor or other interested party.

DIST.	COUNTY	ROUTE	POST MILES—TOTAL PROJECT	SHEET NO.	TOTAL SHEETS
10	SJ	99/120	4.64/5.72 R6.44/T6.76	349	349

REGISTERED GEOTECHNICAL ENGINEER — DATE 8/18/21

AUSTIN ROAD OH (REPLACE)

LOG OF TEST BORINGS 4 OF 4

NOTE: A COPY OF THIS LOG OF TEST BORINGS IS AVAILABLE AT OFFICE OF STRUCTURE MAINTENANCE AND INVESTIGATIONS, SACRAMENTO, CALIFORNIA.

CU: 1016000038
EA: 10-1E7401

BRIDGE NO. 29-0351

SHEET 29 OF 29

Revisions shown on this Log of Test Borings are the addition of the following table and notes.

Boring	Station	Offset from "AR" Line
B-1	87+41.5	7.34 ft Lt
B-2	88+44.3	0.70 ft Lt
B-3	89+79.2	10.9 ft Lt
B-4	88+51.5	11.8 ft Lt
B-5	87+41.5	22.8 ft Rt

Notes:
1. See Log of Test Borings 1 of 4 for stationing.

2. Stations and offset are approximate. The data presented in the table above are referenced to the proposed new structure location and stationing. This table is presented on the As-Built log of test boring sheet for the convenience of any bidder, contractor or other interested party.

REGISTERED PROFESSIONAL ENGINEER DAVID J. MORRELL No. GE 2843 GEOTECHNICAL STATE OF CALIFORNIA

"No Corrections"
AS BUILT
CORRECTIONS BY
DATE 6/21/54

MICROFILMED

BRIDGE DEPARTMENT

FIELD STUDY — DRAWN — CHECKED

Approval Recommended by

CLASSIFICATION OF MATERIAL BASED ON STANDARD GRADE SIZE LIMITS

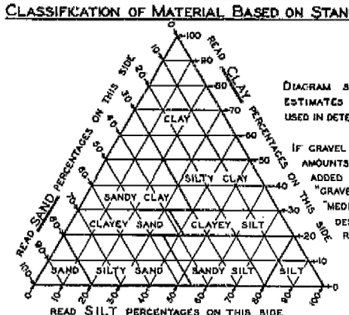

DIAGRAM SHOWING THE BASIS FOR ESTIMATES OF GRADE SIZE DISTRIBUTION USED IN DETERMINATION OF CLASS NAMES

IF GRAVEL IS PRESENT IN APPRECIABLE AMOUNTS THE TERM "GRAVELLY" MAY BE ADDED TO THE CLASS NAME, VIS. "GRAVELLY SAND." THE TERMS "COARSE," "MEDIUM" AND "FINE" WHEN USED TO DESCRIBE GRAVEL, SAND AND SILT REFER TO STANDARD GRADE SIZE LIMITS.

LEGEND OF EARTH MATERIALS

- GRAVEL
- SAND
- SILT
- CLAY
- SANDY CLAY OR CLAYEY SAND
- SANDY SILT OR SILTY SAND
- SILTY CLAY OR CLAYEY SILT
- PEAT AND/OR ORGANIC CLAY
- FILLED MATERIAL
- IGNEOUS ROCK
- SEDIMENTARY ROCK
- METAMORPHIC ROCK

LEGEND OF BORING OPERATIONS

- PLAN. OF ANY BORING
- PENETROMETER
- 2¼" CONE PENETROMETER
- SAMPLER BORING (DRY)
- ROTARY BORING (WET)
- AUGER BORING (DRY)
- JET BORING
- CORE BORING
- TEST PIT

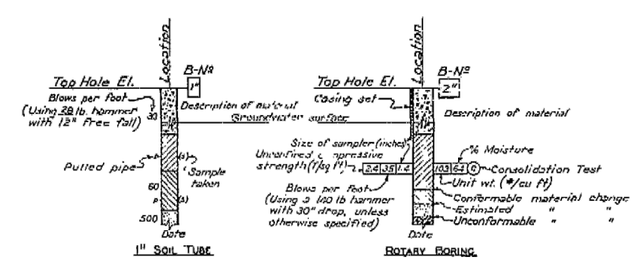

NOTES

THE CONTRACTOR'S ATTENTION IS DIRECTED TO SECTION 2, ARTICLE (C) OF THE STANDARD SPECIFICATIONS AND TO THE SPECIAL PROVISIONS ACCOMPANYING THIS SET OF PLANS. CLASSIFICATION OF EARTH MATERIAL AS SHOWN ON THIS SHEET IS BASED UPON FIELD INSPECTION AND IS NOT TO BE CONSTRUED TO IMPLY MECHANICAL ANALYSIS.
~~PENETROMETER BORINGS HAVING A RATE OF PENETRATION MEASURED IN SECONDS PER FOOT ARE DRIVEN WITH A Nº2 McKIERNAN-TERRY AIR HAMMER AT 115 PSI.~~

STATE OF CALIFORNIA
DEPARTMENT OF PUBLIC WORKS
DIVISION OF HIGHWAYS

AUSTIN ROAD OVERCROSSING

LOG OF TEST BORINGS

SCALE: HORIZ. 1" TO 10' VERT. 1" TO 10' | BRIDGE 29-129 | FILE | DRAWING C-2870-7

I HEREBY CERTIFY THAT THIS IS A TRUE AND ACCURATE COPY OF THE ABOVE DOCUMENT TAKEN UNDER MY DIRECTION AND CONTROL ON THIS DATE IN SACRAMENTO, CALIFORNIA PURSUANT TO AUTHORIZATION BY THE DIRECTOR OF PUBLIC WORKS.

DATE June 17, 1954 SIGNATURE [signature] TITLE Highway Administrative Officer I